VOL. 13, NO. 23, DECEMBER 2018 ISSN 1819-6608
ARPN Journal of Engineering and Applied Sciences

www.arpnjournals.com

DOMOTIC APPLICATION CONTROLLED BY A SMARTPHONE AND REMOTE CONTROL, FOR AN AIR CONDITIONER WITH A MECHANICAL CONTROL TYPE

Jesús D. Quintero-Polanco, Diego F. Sendoya-Losada and José J. Salgado-Patrón
Department of Electronic Engineering, Surcolombiana University, Neiva, Colombia
E-Mail: jdavid@usco.edu.co

ABSTRACT

This document aims to show the development of a prototype for a domotic application for a temperature control for an air conditioner. The application was developed through a Smartphone, using a wireless network for an air conditioner that allows modifying the temperature of the place, the turn on and turning off of the same, besides establishing the current temperature of the system with respect to the desired temperature of the same. For the Bluetooth transmission and web service for the connection with the Smartphone, a mobile application was developed using the eclipse software, using the C# programming language and the N-layer architecture, providing an optimal and efficient design method. The web service was performed through a local server using the Arduino free hardware platform that allows to store the temperature data every 10 minutes, in order to keep a record in a local database of the same, providing this way a page on which the desired temperature can also be controlled. Finally, as results an ON/OFF control system was obtained through a mobile application that provides the user with different ways of doing this control, as well as an alternative method of "IR" transmission that is independent of the mobile application.

Keywords: database, web service, eclipse, arduino, C#, Bluetooth, IR, air conditioning, temperature.

1. INTRODUCTION

Technological advances have led some teams used in the daily life of many people to stick around as an archaic technology.

Mobile applications have become an indispensable tool for our daily lives, for many reasons, they allow us to communicate with each other anywhere we are, it also allows us to access the net and to countless applications made by companies or users for the comfort of the same.

This article refers to the creation of an on/off digital control system for analogue air conditioners which do not have remote control to vary its temperature. This prototype monitors the current temperature, sets a Setpoint to the desired temperature, turn off and turn on the air at the time you want, all this oriented to the Internet of Things (IoT) and through the cell phone using a remote control communicated by the Bluetooth-Android-Arduino or IR-Arduino.

With the development of this project was possible to realize a system that allows the air conditioners that do not bring remote control; be at the forefront of technology. The applications were made with different programs such as: Eclipse, Android studio or Visual Studio which present similar forms of operation. The communication by otherwise was made by two well-known forms; Bluetooth and infrared which have different but efficient ways of communication.

2. MATERIALS AND METHODS

The study that was carried out, implemented a totally digital technology which allowed remotely monitoring and controlling an analog air conditioner, through a Bluetooth or an Infrared transmitter. In addition, a control was carried out through a web server inside the Arduino board, together with a Wi-Fi module

To performing the study on the changing technology of air conditioners took into account the variables presented in this prototype as are: the temperature measurement, the power of the air conditioners, the control system and transmission data.

2.1 System analysis

The types of air conditioners as are the analogues whose control is done by a knob or button to turn on and change the temperature. The most common voltages are at 110 or 220 volts. For the prototype that was made, the temperature varies from 26°C to 16°C, the wire cable used was of 12 and the maximum current is 15A at 110 V.

2.2 Prototype design

According to the state of the art previously exposed, since a suitable system was required to monitor and change variables of an air conditioner with mechanical control, by means of wireless transmission; so, an intelligent controller was needed where the transmission medium to converge and thus achieve precise control of the communication. In addition to this, it would allow to store the temperature and store it in an internal database to be shown in the cloud.

To achieve these system specifications, the Arduino mega 2560 board was chosen due to its wide memory, good data storage capacity, as well as its numerous serial ports that are useful for communication between the sensors of the system and the same.

Arduino also offers a variety of external boards that fulfill specific functions such as Ethernet, Bluetooth, Wi-Fi, LCD, GSM and can be coupled to the Arduino boards in a simple way.

Ports used: the ports used by the prototype vary according to the need of each element, function and module used.

LCD: This element was chosen since it requires a visual aid with respect to the state of the air, current temperature and desired temperature. This system uses the ports Rs pin 12, Enable pin 11, D4 pin 5, D5, pin 4, D6 pin 3 and D7 pin 2 for the connection of the LCD.

Temperature sensor: to monitor the temperature of the environment DHT 11 was used, which uses a thermistor to measure the surrounding air, shows the data through of a digital signal in the data pin that after is processed by the library and then is decoded in form of temperature. For the communication between the sensor with the Arduino Mega 2560 card pin 6 was used.

Bluetooth module: the communication with the Bluetooth module was made with the HC-05 module since it has a low power consumption, it has an easy connectivity, besides it has libraries focused on Arduino. The module transmits data to the Arduino Mega 2560 card through serial communication and uses the RXD and TXD pins which are connected to the Arduino board in pins 0 and 1 respectively.

Infrared sensor: This uses a proprietary Arduino library that decodes the signal emitted by the transmitter and transforms it into a unique numerical code, which makes it possible to differentiate each button pressed. The data of the receiver and the Arduino board are communicated through pin 8.

Wi-Fi module: since a low power consumption module was required, as well as one that could be used as a server and that allowed connecting to a network through Wi-Fi. The module ESP8266 was chosen for these reasons. This module communicates with the Arduino Mega board through serial communication, using pin 46 for the RX and pin 48 for the TX.

The design of the control circuit will be included inside the air conditioning circuit. This was done using the AT-MEGA board, which is in charge of the control and readings performed by the system. The measurement of the temperature was carried out with a DHT 11 sensor, the power stage was made out with a 12 volt relay at 220 volts thus allowing the change of ON / OFF state in this stage, the transmission of the data was made by Infrared, Bluetooth and a web service.

The infrared system stage was carried out with a sensor that reads the frequencies of the same and transforms them to data with that the system is subsequently controlled.

By other way, for the transmission with Bluetooth a mobile application was used that directly connects the Bluetooth installed in the control card with the user's mobile phone. It allows storing the data of the temperatures every 10 minutes, as well as to control the system and send the respective temperature desired by the user to the control system. The mobile application is versatile, with a user-friendly interface and allows you to view a scheme of a remote control of the air conditioning.

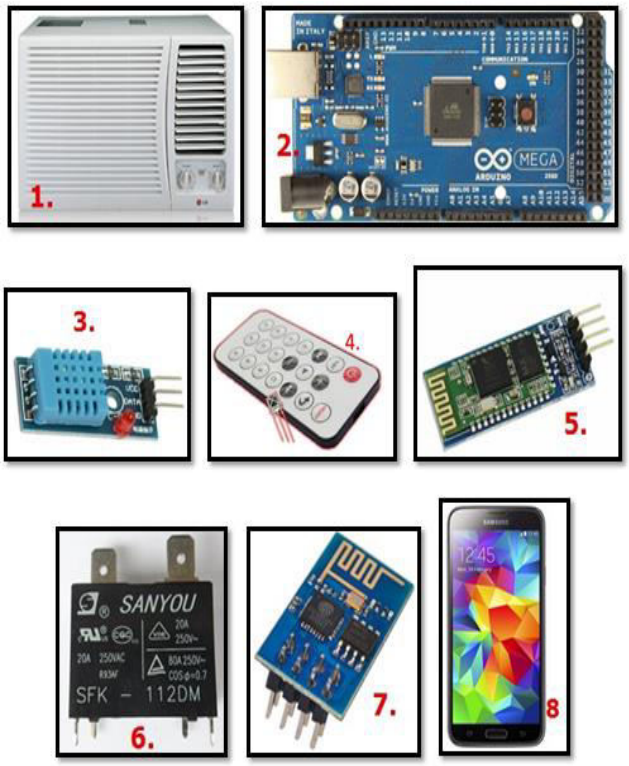

Figure-1. Elements used in the prototype.
Source: author

1. Analogue air conditioning
2. Arduino one
3. DHT11 temperature sensor
4. Infrared sensor
5. Bluetooth module for Arduino HC-06
6. Relay 12 volts at 220 volts
7. Wi-Fi module ESP8266
8. Android mobile phone

For the power control system, a relay was used to turn on the air conditioning, at the same time the cooling unit is turned on. It is necessary that the power stage has protection, since if any error occurs in the system, damage must be avoided in any of the other devices used. This power stage was designed as in Figure-2. It is shown in order to increase the efficiency of the circuit.

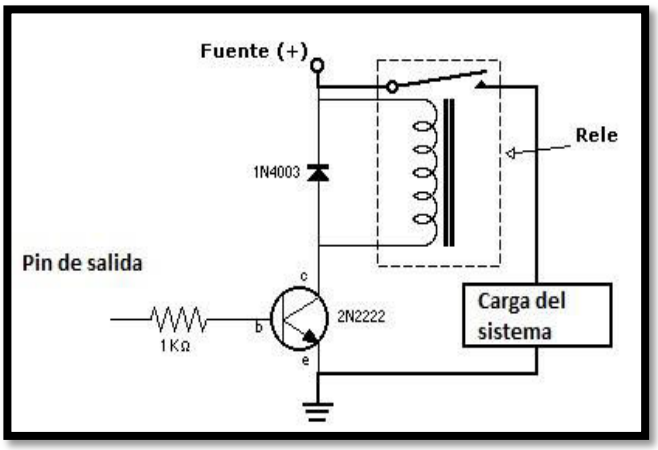

Figure-2. Power stage of the prototype.
Source: Author

3. RESULTS AND DISCUSSIONS

For the correct functioning of the system according to the implemented design; the elements of control, communication and remote control with the mobile application are those shown below.

3.1 Final control system

The elements used for the air conditioning control system are those shown in Figure-3. Where the power stage, the Arduino, the data transmission systems and the temperature sensor are included.

Figure-3. Final design of control system.
Source: Author

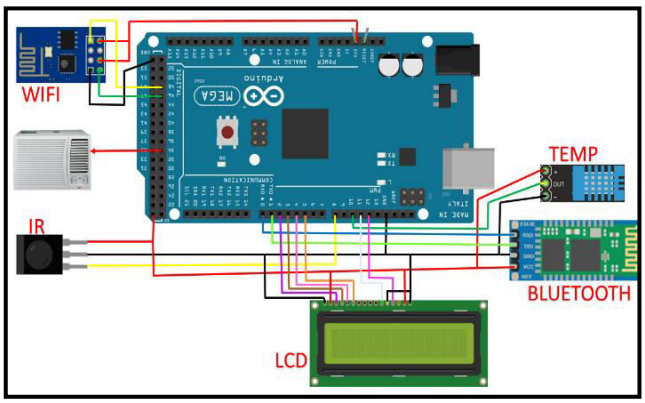

Figure-4. Final design of the prototype.
Source: Author

3.2 Power stage

In this power control system a 5V relay conditioned by a circuit mentioned above was used. The temperature control system will have its own relay, which will automatically control the air conditioning through its set points.

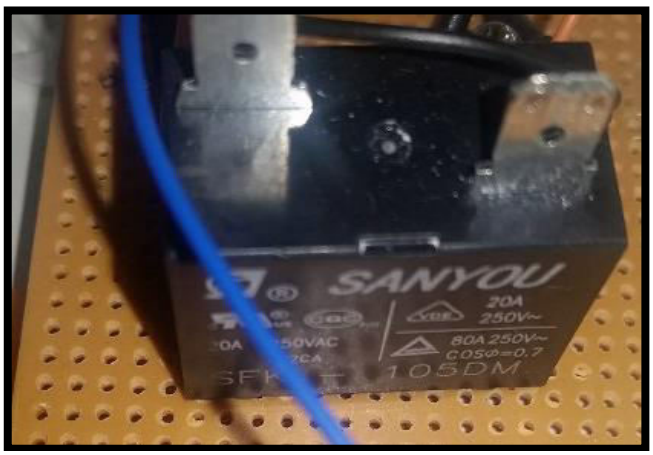

Figure-5. Power stage of the system.
Source: Author

3.3 Control through the mobile application

The first thing to do before starting to transmit data to the prototype is to synchronize the Bluetooth module of the controller with the Bluetooth of the cell phone. Once synchronized, the mobile application is initialized. For the part of the Wi-Fi module it is necessary to connect to the local network that the ESP8266 server provides. For the remote connection its need to be connected or have internet service, for this application in Figure-6. The environment and the interface of the same are shown:

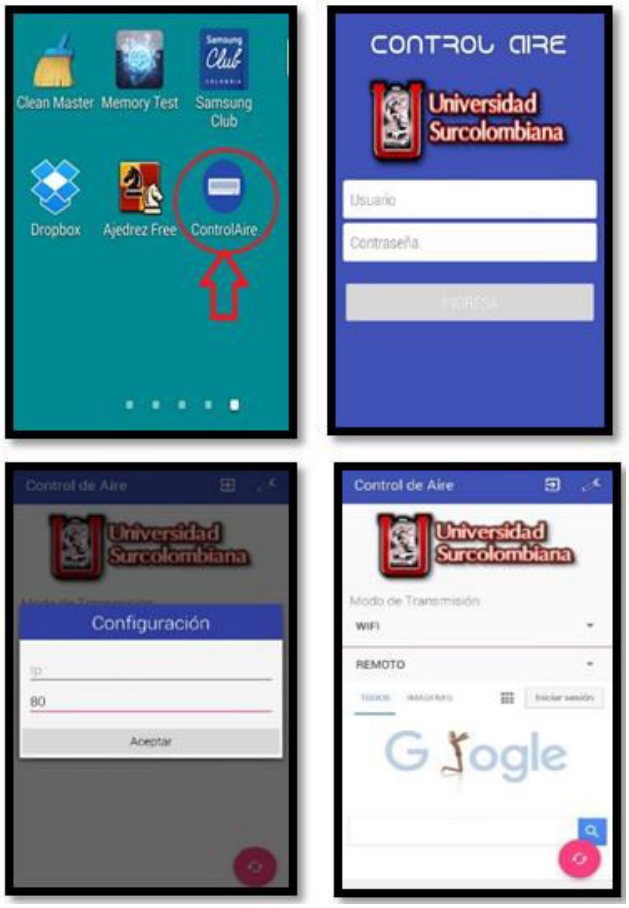

Figure-6. Mobile application interface.
Source: Author.

3.4 User manual

It is necessary for the user to comply with a series of requirements that must be met before the application can be used, such as:

Select the transmission mode you are going to use, that is, choose between Bluetooth and Wi-Fi.

In the case of selecting the Bluetooth mode, you must connect the mobile application with the Bluetooth module of the controller; this is the first stage before doing any type of operation. Finally, perform any of the available actions: Turn on or off the device, initially the application is configured to reach a cooling temperature of 17 degrees, however it can set the temperature to any since it is in the operating range of the air conditioner.

In the case of selecting the Bluetooth mode, you must connect the mobile application with the Bluetooth module of the controller; this is the first stage before doing any type of operation. Finally, perform any of the available actions: Turn on or off the device, initially the application is configured to reach a cooling temperature of 17 degrees, however it can set the temperature to any since it is in the operating range of the air conditioner.

3.5 Infrared remote control

The system of transmission and reception of data is used by a basic RGB light system commonly used by people, the infrared receiver of that system was adapted with the control system, and the remote control of it was used for remote control of the system implemented, in the Figure-7. It can be seen the infrared remote control used.

Figure-7. Infrared remote control.
Source: Author

The buttons on the infrared remote control of the air conditioner used to control the temperature or to deactivate the circuit are the following:

To turn on and off the system temperature the following buttons are used.

To raise and lower the temperature to a desired temperature the following buttons are used.

3.6 Conclusions

Through this project it was possible to automate air conditioners with an old technology in order to achieve greater comfort for the daily living of the people.

Successfully completed each and every one of the stages that were raised at the beginning of the project, taking into account that the control that was intended to be supplied to these remote systems was developed, the temperature was recorded and remote control was achieved by means of Bluetooth or infrared.

The infrared and Bluetooth domotic control system for air conditioning was successfully implemented, thanks to the use of Arduino with these two interfaces. The importance of this lies in the great variety of possibilities that can be made using a development board like this.

The creation of web applications with HTML5 programming language facilitates the coupling with any mobile device, giving the possibility that the application can be seen from different devices through your web browser. In addition, by varying some parameters in the file made in HTML5 you can build an application capable of supporting different operating systems.

The development of this project contributes and encourages research towards the development of applications that reuse electronic systems, as is the case with analog air conditioners adjusted to domotic in order to reduce costs and improve the environment by reducing energy consumption.

ACKNOWLEDGEMENT

To thank the reviewers of this work and the Vice-Ministry of research and social projection of the Surcolombian University.

REFERENCES

[1] Aguilar E. 2006. Pruebas de SQLite en un Sistema Linux - Guía para iniciarse. pp. 1-9.

[2] Betancourt L., Gómez N. 2009. Implementación de un Sistema Teleoperado con Reaimentación Visual para evasión de Obstáculos de un Robot Móvil.

[3] Mateu C. 2004. Desarrollo de Applications Web. Barcelona. pp. 212-316.

[4] Zablaza F. 2011. Representación de Variables Eléctricas en el Sistema Embebido mini 2440. Pamplona. pp. 9-10.

[5] Donelson J. 2008. Building and Installing Software for the mini 2440, p. 20.

[6] ISO. ISO/IEC 18000-6: Information technology automatic identification and Data capture techniques.

[7] The bluetooth blues. 2001. http://www.information-age.com

[8] Identificación por radiofrecuencia (RFID) a nivel de artículo - Parte 6: Parámetros de comunicación del interfaz aire a 860-960 MHz.

[9] Casadomo. 2003. El Portal de la Domótica y el Hogar Digital. Consultado en abril de 2018. http://www.casadomo.com.

[10] Llinares A. 2013. Sistemas Embebidos. Consultado en abril de 2018. http://server-die.alc.upves/asignaturas/PAEEES/2005-06/A07%20-20Sistemas%20Embebidos.pdf.

[11] Historia del Aire Acondicionado, consultado en abril de 2018.http://www.elaireacondicionado.com/articulos.html.

[12] Gloria Esperanza León Aristizabal. Tendencia de la temperatura del aire en Colombia. Página: 1-6.

[13] Historia del aire acondicionado. 1902-2002 -100 años de innovación. Consultado en enero de 2018. http://www.carrier.es/news/history.html

[14] La obra de climatización más grande de américa latina, consultado en enero de 2018. http://www.mundohvacr.com.mx/mundo/2012/03/la-obra-de-climatizacion-mas-grande-de-america-latina/

[15] Acaire consultado en Enero de 2018 http://www.acaire.org/acerca.php.

[16] Osvaldo Angel Filippone. Aporte a la Teoría del Aire Acondicionado. Características del bluetooth. Consultado en Enero de 2018 http://www.marketing-bluetooth.com/bluetooth-caracteristicas.html.

[17] Brian W. Evans. Arduino programming notebook. Edición Española.

[18] Dr. S. C. Liew. «Electromagnetic Waves». Centre for Remote Imaging, Sensing and Processing.

[19] Mid-Range MCU Family Reference Manual. SECTION 18. USART. pp. 18-24.

[20] Antonio J. Lara valencia. Introducción a la domótica viviendas inteligentes. Facultad de informática universidad de Murcia.

[21] Bluetooth con pic, consultado en Enero de 2018 http://www.trastejant.es/circuitos/bluetoothPic.html.

[22] Jaime Gálvez N. Control de un módulo bluetooth mediante microcontrolador. Consultado en Enero de 2018 https://www.researchgate.net/publication/41544218_Control_de_un_modulo_bluetooth_mediante_un_microcontrolador

[23] Fernando Augusto España cano, Eliana Fernanda Tacán Cuellar. Diseño e implementación de un sistema de control y monitoreo remoto para la iluminación de una vivienda a través de un dispositivo móvil con sistema operativo Android y board arm, Facultad de Ingeniería, Programa de Ingeniería Electrónica USCO.