VOL. 14, NO. 2, JANUARY 2019 ISSN 1819-6608
ARPN Journal of Engineering and Applied Sciences

www.arpnjournals.com

TWO-WAY SMS AND BRAILLE COMMUNICATION FOR THE VISUALLY IMPAIRED

Aaron Don M. Africa, Aldrich Kevin G. Chua, Sylbert Danley O. Chua, Lawrence De Ausen, Joseph Vincent M. Gregorio and Mark Daniel Quilnet
Department of Electronics and Communications Engineering, Gokongwei College of Engineering, De La Salle University, Manila, Philippines
E-Mail: aaron.africa@dlsu.edu.ph

ABSTRACT

Communication has played a vital role in our everyday living. But what is communication? Communication is basically the exchange of information between two or more people. With our world that's innovating faster as time passes, we can't simply deny that communication is important. Communication between people is easy as long as you can reach them whether it is with the use of the email, mobile phones, letters and any other forms of interactions. Communication via email and mobile phones are almost available to all but not for the disabled. A good example is the communication among the visually impaired. Communication with the use of devices posts a difficulty to the visually impaired since they cannot see what they are going to click to be able to compose or read a message. With the innovation we have now, it is undeniable that devices for the visually impaired are being produced so they can act as a normal person. In this thesis, the group created an SMS device for the visually impaired. The output of the project can send and receive SMS messages which can be read via braille display. The creators used microcontroller PIC18f4620 and programmed using Mikro Basic.

Keywords: braille, microcontroller systems, GSM modules, SMS communications.

1. INTRODUCTION

In the present day, people are now gearing towards new technologies especially in communication system. This is proven by the rapidly increasing of the communicating tools around the world in which almost every month there are new technologies that are being produce and make its appearances in the public market [1]. But there are some people who cannot use these devices due to disability they possess. Thus, making them feel left behind, making their life a bit more difficult compared before [2,3].

Many visually impaired people are unemployed. Statistic shows that there are around seventy percent unemployment rate among the visually impaired in USA. One of the factors is that having a visually impaired person working gives risk that might endanger people because of misunderstanding. This notion is still present among all people which lead to lack of confidence for the impaired group [4,5].

Visually impaired people do not have the ability to send SMS or engage in texting due to their lack of eye sight. Visually impaired people have a hard time adjusting to activities which normal people do which makes it a struggle for them every day. One of the most popular technology today that the group thinks visually impaired people will have a hard time using is the Short Message Service or SMS [6]. Communicating with visually impaired people are limited due to their lack of vision making SMS or texting an impossible means of communication for them. Without their sense of sight, they rely through their other senses like hearing and the sense of touch [7,8]. This makes it hard to communicate with visually impaired people from a distance using SMS. Also, on their part, it would be difficult to express their thoughts unless they are talking to someone near them [9].

2. THEORETICAL FRAMEWORK AND DESIGN CONSIDERATION

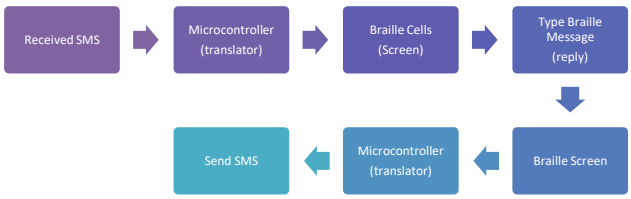

Figure-1. System block diagram.

The figure above illustrates the overall system block diagram of the device. Initially, the message received will be translated by the microcontroller which will be programmed. The microcontroller will then set the Braille cells to their respective translations. The user will now be able to read the message received through the Braille screen [10,11].

If the user desires to reply or text, he will type the message through the Braille keypad [12]. The keypad consists of a two by three buttons which the user will press. The buttons are pressed depending on which translation is desired [13]. If the user pressed the upper left button and pressed enter, the Braille screen will show the upper left button to be shown and the other five are pressed down. The translation shows letter "A". The Braille screen can be used to check if the intended characters or message is written. After the message is typed, it will now be translated by the microcontroller into SMS and send it to the intended recipient.

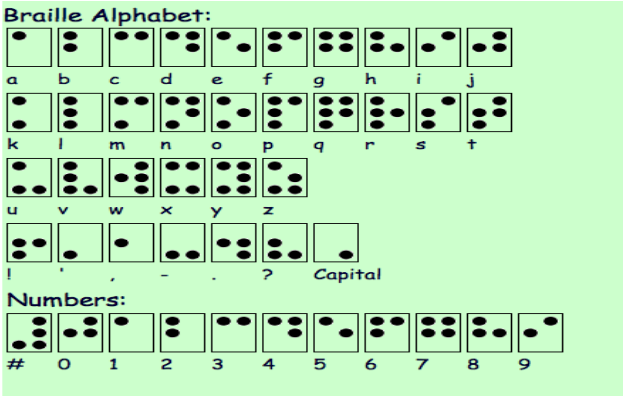

Figure-2. Braille alphabet and numbers [14].

The Braille is a writing system that enables visually impaired people to read and write through touch. It is invented by a French national called Louis Braille which also is visually impaired [15]. It consists of a two b three dots that are set in a unique pattern such that every letter, some words and numbers are represented. It has levels of encoding, grade 1 for every letter and grade 2 for abbreviations and contractions which consumes lesser page number than the first grade, grade 3 is used in shorthand for personal purposes and the grade 4 level, sometimes called "Computer Braille", is used for computer purposes as stated from the name itself.

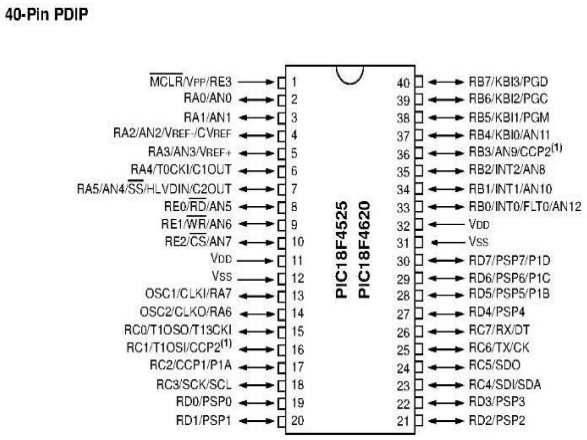

Figure-3. PIC18F4620 [16].

A microcontroller is a compact microcomputer designed to govern the operation of embedded system in motor vehicles, robots, office machines, complex medical devices, mobile radio transceivers, vending machines, home appliances, and various other devices. These include a CPU core, memory for the program, memory for data, one or more timers, as well as I/O lines to communicate with external peripherals and complementary resources. In Programmable Integrated Circuit or PIC family, there are several types of microcontrollers and all have a common feature which is to store memories. And in this thesis, a PIC is very essential for which it will act as the brain of the system. PIC is mostly used in circuits to perform many kinds of embedded program. By using the embedded programs, it takes input from the device it is managing and controls the device by sending signals to various components in the device.

PIC18F4620 is an 8-bit microcontroller that has 40 pins, clock speed of up to 40MHz, 64k flash program memory, 1024 bytes EEPROM, with 2 comparators and an operating voltage range of 2 to 5.5 (V). It functions at a very low voltage where it usually only needs 5 volts [17].

GSM is an open, digital cellular technology used for transmitting mobile voice and data services. It was originally developed as a TDMA technology which is a digital system. TDMA is the method used for accessing a GSM; it is a channel access method for shared medium networks. It allows several users to share the same frequency channel by dividing the signal into different timeslots. GSM is a circuit-switched system that divides each 200kHz channel into eight 25kHz time-slots. GSM operates in the 900MHz and 1.8GHz bands in Europe and the 1.9GHz and 850MHz bands in the US. The 850MHz band is also used for GSM and 3GSM in Australia, Canada and many South American countries. Even though there are specific GSM for some countries, GSM that operates at either 900 MHz or 1800 MHz are used most part of the world, though GSM-900 is the usually used frequency band. Cellular phones use signals via cell, the cell varies at different sizes: macro, micro, femto, pico and umbrella cells. Basically, GSM is a 2G cellular system and an international standard used by cellular phones.GSM is the only cellular service that can be used whenever the user travels around the world. GSM is a widely used system in the market and is very economical to use because majority of the people has a cellular phones.

The UART transmitter block diagram is shown in Figure-4. The heart of the transmitter is the transmit shift register UxTSR where parallel data (9-bit word) are converted to serial data sequences [18]. The shift register obtains its data from the transmit FIFO buffer, TxTXREG. The write-only UxTXREG register is loaded with data by the user software. The UxTXREG is not loaded until the STOP bit has been transmitted from the previous load. As soos as the STOP bit is transmitted, the UxTSR is loaded with new data from the UxTXREG register.

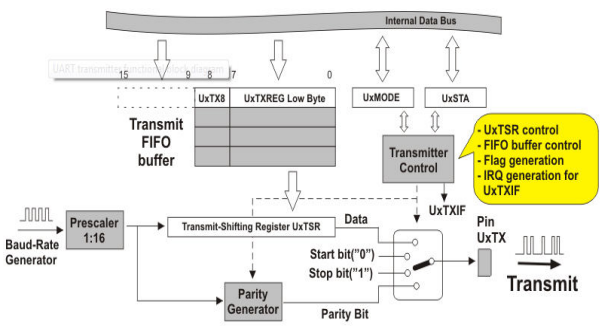

Figure-4. UART transmitter functional block diagram [19].

The UART transmitter block diagram is shown in Figure-4. The heart of the transmitter is the transmit shift

register UxTSR where parallel data (9-bit word) are converted to serial data sequences. The shift register obtains its data from the transmit FIFO buffer, TxTXREG. The write-only UxTXREG register is loaded with data by the user software. The UxTXREG is not loaded until the STOP bit has been transmitted from the previous load. As soos as the STOP bit is transmitted, the UxTSR is loaded with new data from the UxTXREG register.

The UART receiver functional block diagram is shown in Figure-5. The heart of the receiver is the receive shift register UxRSR where a serial sequence is converted to a parallel word (9-bit word). After sampling the UxRX pin for the STOP bit, the received data in UxRSR are transferred to the receive FIFO buffer, if it is empty.

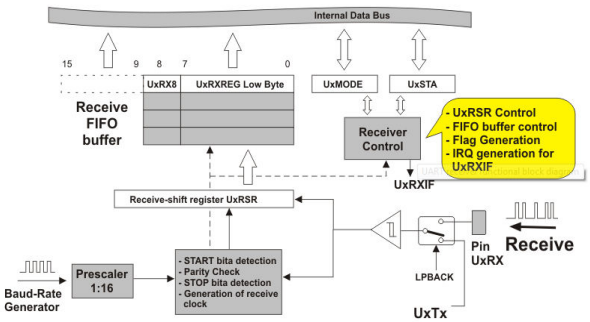

Figure-5. UART receiver functional block diagram [20].

The data on the UxRX pin are sampled three times by a majority detect circuit to determine if a high or a low level is present at the UxRX pin. The FIFO receive data buffer consists of four 9-bit wide memory locations. The access to the contents of the receive FIFO buffer is via the UxRXREG read-only register. It is possible for 4 words of data to be received and transferred to the FIFO buffer and a fifth word to begin shifting data to the UxRSR register before a buffer overrun occurs. When the FIFO is full (four characters) and a fifth character is fully received into the UxRSR register, the overrun error bit OERR (UxSTA<1>) will be set. The word in UxRSR will be kept, but further transfers to the receive FIFO are inhibited as long as the OERR bit is set. The user must clear the OERR bit in software to allow further data to be received. Clearing the OERR bit, clears the receive FIFO buffer.

Assembly language is a basic programming language that is used for computer, microcontroller and other programmable device. Number representations are mostly used in assembly language like binary, decimal and hexadecimal. Examples of the elements of the assembly language are labels, operands, instructions, directives and comments. Assembly language is converted by the assembler into a machine code which is called assembling. Assembler helps in finding error codes. However, assemblers can only check the syntax of each line, and check that every symbol and label used is defined.

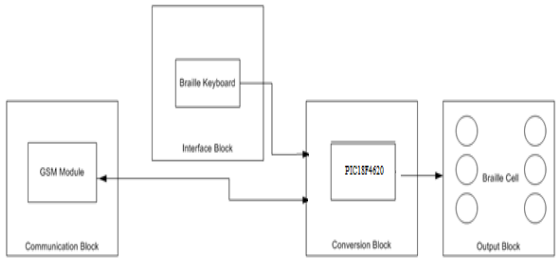

Figure-6. System block diagram.

The figure shows the diagram summary of the system. It is comprised of four blocks which represent the major parts of the system namely the communication block, interface block, conversion block and the output block.

The Communication Block, the transmit and receive of the SMS in the system is under the communication block. This block is made up of the GSM module where in it is configured to be compatible with the PIC that is to be used. The module has a SIM card in it which the card holds the account information of the user wherein he can either receive or transmit an SMS. The message received by the GSM will then be sent to the conversion block. If the user then decides to send a message, the conversion block sends the message to the communication block in order to transmit the message to the appropriate recipient.

The Interface Block, this block represents the keyboard of the device. The input for the microcontroller is taken from here when the process to be done is transmitting an SMS. A two by three push buttons are set in a form of a Braille cell where in it represents the dot it has the same place with. This block also has the option switches which are responsible to inform the microcontroller on what to do. These switches are push buttons which are connected to the pins of the microcontroller.

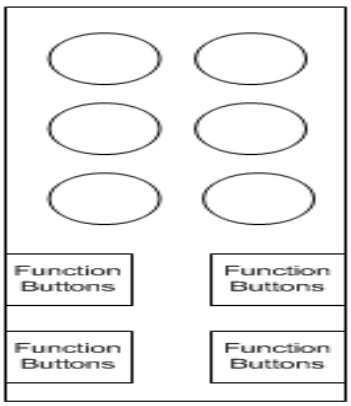

Figure-7. Braille phone.

The conversion block, this block is responsible for changing the message into either Braille or SMS. The SMS coming from the GSM module is then sent to the microcontroller. The pins twenty-five and twenty six of the microcontroller are connected with the GSM module. This is the part where the message is sent to the microcontroller for conversion. Android programming can also be used in the program upgrade [21]. It is also to make the system sending automated [22]. After the interface, the message will be saved to the microcontroller one character at a time in order to be processed properly. After storing, it then converts the message into its Braille representation and is then sent to the output block.

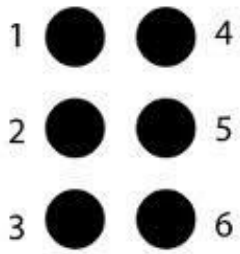

Figure-8. Braille cell [23].

The output block, this block is made up of the Braille cell which will receive the signal coming from the microcontroller. The translated message is then transferred to the cell. The Braille cell will then show the representation of the message. The process of the output block is the same in both transmit and receive. Another suggestion is to use RFID to transmit the messages [24]

The register circuit shown in Figure-8 has been designed by the proponents which will be used as a latch to store the read digital code. Figure-9 is the modified DFF design wherein enable pins has been incorporated. There are times when there is incomplete information in the database. In this case the rough set theory can be used to determine that information [25, 26]. Rough Set Theory is useful for Datasets with incomplete data [27, 28, 29].

3. RESULTS AND DISCUSSIONS

Table-1. Self-testing send function from braille phone to actual cellphone.

Dots pressed	Message received
1	A
1-2	B
1-4	C
1-4-5	D
1-5	E
1-2-4	F
1-2-4-5	G
1-2-5	H
2-4	I
2-4-5	J
1-3	K
1-2-3	L
1-3-4	M
1-3-4-5	N
1-3-5	O
1-2-3-4	P
1-2-3-4-5	Q
1-2-3-5	R
2-3-4	S
2-3-4-5	T
1-3-6	U
1-2-3-6	V
2-4-5-6	W
1-3-4-6	X
1-3-4-5-6	Y
1-3-5-6	Z
3-4-5-6 + 2-4-5	0
3-4-5-6 + 1	1
3-4-5-6 + 1-2	2
3-4-5-6 + 1-4	3
3-4-5-6 + 1-4-5	4
3-4-5-6 + 1-5	5
3-4-5-6 + 1-2-4	6
3-4-5-6 + 1-2-4-5	7
3-4-5-6 +1-2-5	8
3-4-5-6 + 2-4	9
2-3-5	!
3	‘
2	,
3-6	-
2-5-6	.
2-3-6	?
1-2-3-4-5-6	SPACE

Table-2. Self-testing received function from an actual cell phone to braille cell phone.

Message sent	Dot output
A	1
B	1-2
C	1-4
D	1-4-5
E	1-5
F	1-2-4
G	1-2-4-5
H	1-2-5
I	2-4
J	2-4-5
K	1-3
L	1-2-3
M	1-3-4
N	1-3-4-5
O	1-3-5
P	1-2-3-4
Q	1-2-3-4-5
R	1-2-3-5
S	2-3-4
T	2-3-4-5
U	1-3-6
V	1-2-3-6
W	2-4-5-6
X	1-3-4-6
Y	1-3-4-5-6
Z	1-3-5-6
#0	3-4-5-6 + 2-4-5
#1	3-4-5-6 + 1
#2	3-4-5-6 + 1-2
#3	3-4-5-6 + 1-4
#4	3-4-5-6 + 1-4-5
#5	3-4-5-6 + 1-5
#6	3-4-5-6 + 1-2-4
#7	3-4-5-6 + 1-2-4-5
#8	3-4-5-6 +1-2-5
#9	3-4-5-6 + 2-4
!	2-3-5
‘	3
,	2
-	3-6
.	2-5-6
?	2-3-6
SPACE	1-2-3-4-5-6

Testing two-way communication with Visually Impaired Respondents, the 25 respondents with the age of between 10 to 25 were all taken from the Philippine National School for the Visually Impaired. In testing the send and receive function of the Braille phone, the group allowed each of the users to operate the device. First, the group sent simple words or phrases like "apple" or "hi kerby" into the Braille phone to check if the users can read incoming messages clearly. There was no problem in the receive function of the device. None of the respondents had any trouble in reading the words or phrases on the Braille screen.

Second, the respondents sent a message of their choice back to group's cellular phone. Most of the users had an easy time typing and expressing their thoughts through the Braille phone. Some of the respondents texted their own names like LYKA, RICHMOND and etc. Others had trouble because they did not check their own message on the Braille screen and continued to type out of enjoyment and excitement. Others had a hard time reaching and pressing the keypads. Some of the users stated that the buttons on the keypad are too far apart. Aside from the said problems, the users had an easy time learning and adjusting to the product. Neural Network and Logic Scoring of Preference can be used to improve the system [30,31]. In addition Artificial Neural Networks and Spatial Techniques can be used to increase the accuracy [32,33].

Table-3. Age of the respondent from 10 to 15 years old, average time of message completion and accuracy.

Age	Average time in sec	Accuracy
10	27	100%
11	15	97.91%
12	16	88.49%
13	17	48.57%
13	25	0%
14	20	100%
14	18	94.73%
15	7	85.14%
15	30	100%
15	25	100%

Total Time : 200s
Average Time : 20s

Table-4. Age of the respondent from 16 to 25, average time of message completion and accuracy.

Age	Average time in sec	Accuracy
16	17	92.85%
16	9	100%
17	31	95.23%
18	16	83.33%
18	20	70%
19	40	100%
20	7	100%
23	11	100%
25	10	100%

Total Time : 161s
Average Time : 17.89s

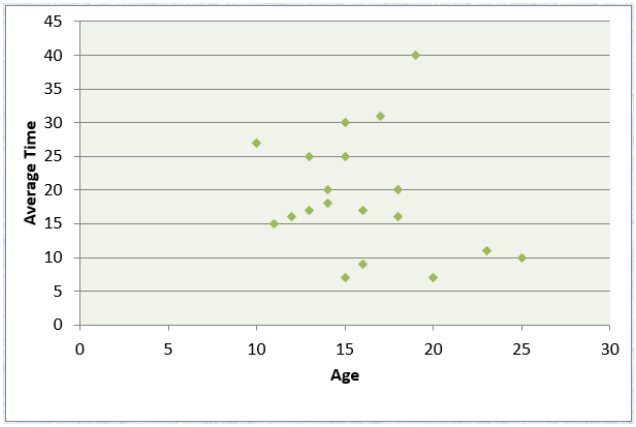

Figure-9. Scatter plot (age vs average time) of Table-1 and Table-2.

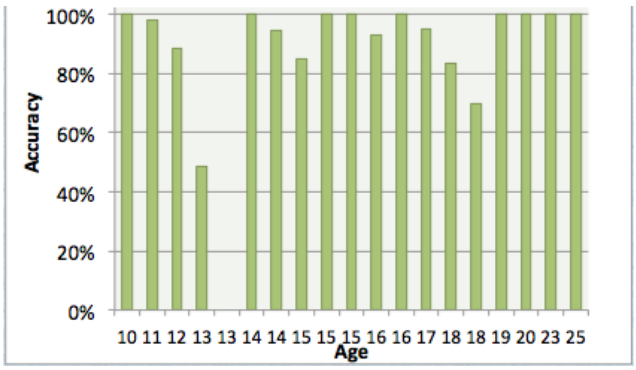

Figure-10. Bar graph (age vs accuracy) of Table 3 and Table-4.

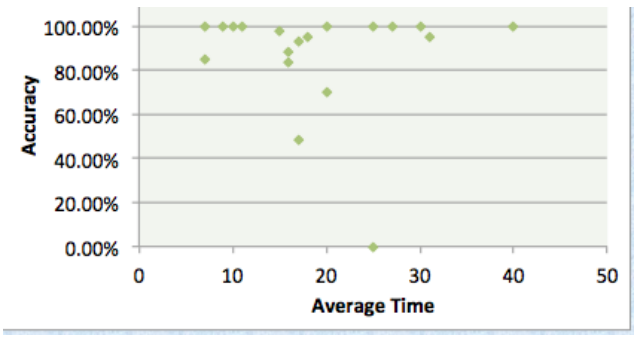

Figure-11. Scatter plot (accuracy vs average time) of Table-3 and Table-4.

4. CONCLUSION AND RECOMMENDATION

The group can conclude base from the experiences taken from the construction of the device is that the hardware design should be finalized first before doing the software. The group first decided to finish the software first before creating the hardware which caused a lot of time. In every addition or change in the hardware, there is also a corresponding change in the program. Despite the encountered problem, the group was able to construct the device and fulfil the necessary objective. The device was used by twenty five students that are visually impaired and has background about Braille. Based from the experiment done, the conversion of the SMS to Braille was very accurate wherein all the students who read the message were correct. The students were also able to send messages accurately but there are a significant amount of students that were not able to send their message accurately. The problem is that the students, especially those that are in elementary, are too excited to type the message that they sometimes do not check the letter they pressed which may lead to a different character. Other than that, the accuracy of other students are ninety-five percent and above. We can also conclude from the survey that the device has its own advantages against the "Talks" or the application that the students use in their mobile phones that literally reads the message to them. The application is English based therefore; there are Filipino words that are mispronounced. In using the device, the user will just rely on their ability to read the Braille which shows high accuracy. The speed of the user in using the device depends on their finger strengths. The older students tend to be faster in pressing the buttons than the younger ones.

For future research of the topic, there are list of points that can help for improvement. The respondents gave each of their opinion about the device. Most of them said that it is very easy to use and the buttons that were used are soft but the distance should be smaller. Decreasing the distance of the buttons will allow users with smaller hands to use the device faster. The improvised Braille cell was said to be the same to the ones that they are used to but the orientation is different from how they write but is the same with the Braille that they use. Putting an option for orientation may help other users that are more oriented in using the reversed version of the Braille. The number of Braille cell should be increased. The speed of the user in reading the message is proportional to the number of Braille cell present. Adding Braille contraction option in the device is also highly recommended by the respondents since it can boost the speed of creating and reading a message. The size of the device should also be reduced. The GSM module took a lot of space in the device but it is possible to reduce the size. The weight should also be lessened for portability. The respondents also commented that the volume of the buzzer is too loud and if possible should be lessened. Lastly, to make the unit function like a real mobile phone, adding voice calls in the device is highly recommended.

REFERENCES

[1] Rouil R., Garey W., Gentile C., Golmie N. and Schwinghammer P. 2018. Increasing public safety broadband network resiliency through traffic control. Digital Communications Network. 4(1):48-57.

[2] Braile Works. 2018. Braille is not a different language. https://brailleworks.com/braille-resources/what-is-braille/

[3] Alnfiani M. and Sampalli S. 2017. BrailleEnter: A Touch Screen Braille Text Entry Method for the Blind. Procedia Computer Science. 109(1):257-264.

[4] Bernardo J., Cawa D., and Chan A., Galfo E. 1996. Microcontrolloler-Based Aid for the Visually impaired in Reading Mobile Phone Messages Using the Braille System.

[5] Bieling T. 2012. Mobile lorm glove. http://www.design-research-lab.org/?projects=mobile-lorm-glove

[6] Bies, L. 2011. RS232 Specifications and standard. LammertBies - Computer Interfacing - Homepage. http://www.lammertbies.nl/comm/info/RS-232_specs.html.

[7] Bies L. 2011. Serial UART, an in depth tutorial. LammertBies - Computer Interfacing - Homepage. http://www.lammertbies.nl/comm/info/serial-uart.html.

[8] Conway K. 2011. UART. http://whatis.techtarget.com/definition/UART-Universal-Asynchronous-Receiver-Transmitter.

[9] NFB (National Federation of the Blind). 2018. Promoting Literacy for the visually impaired in the 21st Century. http://www.braille.org/.

[10] GSM: Tutorial. 2018. University of Colorado at Boulder - Homepage. http://ecee.colorado.edu/~ecen4242/gsm/index.htm.

[11] GSM: Network Architecture. 2018. University of London Computer Science Department – Website. http://www0.cs.ucl.ac.uk/staff/t.pagtzis/wireless/gsm/arch.html.

[12] Halls L. 2012. Information about braille. http://www.lisa-halls-world.org/braille.htm.

[13] Innovation News Daily Staff. 2012. Mobile lorm glove helps deaf-visually impaired people text message. http://www.huffingtonpost.com/2012/04/07/mobile-lorm-text-message-glove-deaf-visuallyimpaired_n_1409786.html.

[14] American Foundation for the Blind. 2018. Braille Alphabet and Numbers. http://braillebug.afb.org/Braille_print.asp.

[15] Yanko. 2009. Braille e-book concept. http://www.techfresh.net/braille-e-book-concept/.

[16] Microchip Dataset. 2008. PIC18F2525/2620/4525/4620 Datasheet. http://ww1.microchip.com/downloads/en/devicedoc/39626e.pdf.

[17] Goodwine B. 2002. RS-232 Serial Protocol.University of Notre Dame Robotics and Controls. http://controls.ame.nd.edu/microcontroller/main/node24.html.

[18] Durda F. 2013. Serial and UART Tutorial. http://www.freebsd.org/doc/en/articles/serial-uart/.

[19] Mikroe Elektronika. 2018. UART Transmitter. https://www.mikroe.com/ebooks/programming-dspic-microcontrollers-in-pascal/uart-transmitter.

[20] Mikroe Elektronika. 2018. UART Receiver. https://www.mikroe.com/ebooks/programming-dspic-microcontrollers-in-pascal/uart-receiver.

[21] Africa A., Mesina A., Izon J. and Quitevis B. 2017. Development of a Novel Android Controlled USB File Transfer Hub. Journal of Telecommunication, Electronic and Computer Engineering. 9(2-8): 1-5.

[22] Africa A. Aguilar J., Lim Jr C., Pacheco P. and Rodrin S. 2017. Automated Aquaculture System that Regulates Ph, Temperature and Ammonia. 9th International Conference on Humanoid, Nanotechnology, Information Technology, Communication and Control, Environment, and Management (HNICEM).

[23] Vision Flora. 2018. Braille Basics. http://visionfora.blogspot.com/2010/12/braille-basics.html.

[24] Africa A., Bautista S., Lardizabal F., Patron J. and Santos A. 2017. Minimizing Passenger Congestion in Train Stations through Radio Frequency Identification (RFID) coupled with Database Monitoring System. ARPN Journal of Engineering and Applied Sciences. 12(9): 2863-2869.

[25] Africa A. and Cabatuan M. 2015. A Rough Set Based Data Model for Breast Cancer Mammographic Mass Diagnostics. International Journal of Biomedical Engineering and Technology. 18(4): 359-369.

[26] Africa A. 2017. A Rough Set Based Solar Powered Flood Water Purification System with a Fuzzy Logic

Model. ARPN Journal of Engineering and Applied Sciences. 12(3): 638-647.

[27] Africa A. 2017. A Rough Set-Based Expert System for diagnosing information system communication networks. International Journal of Information and Communication Technology. 11(4): 496-512.

[28] Africa A. 2017. A Mathematical Fuzzy Logic Control Systems Model Using Rough Set Theory for Robot Applications. Journal of Telecommunication, Electronic and Computer Engineering. 9(2-8): 7-11.

[29] Africa A. 2017. A Mathematical Fuzzy Logic Control Systems Model Using Rough Set Theory for Robot Applications. Journal of Telecommunication, Electronic and Computer Engineering. 9(2-8): 7-11.

[30] Africa A. and Velasco J. 2017. Development of a Urine Strip Analyzer using Artificial Neural Network using an Android Phone. ARPN Journal of Engineering and Applied Sciences. 12(6): 1706-1712.

[31] Africa A. 2018. A Logic Scoring of Preference Algorithm using ISO/IEC 25010:2011 for Open Source Web Applications Moodle and Wordpress. ARPN Journal of Engineering and Applied Sciences. 13(15).

[32] Brucal S., Africa A. and Dadios E. 2018. Female Voice Recognition using Artificial Neural Networks and MATLAB Voicebox Toolbox. Journal of Telecommunication, Electronic and Computer Engineering. 10(1-4): 133-138.

[33] Loresco P. and Africa A. 2018. ECG Print-out Features Extraction Using Spatial-Oriented Image Processing Techniques. Journal of Telecommunication, Electronic and Computer Engineering. 10(1-5): 15-20.