VOL. 14, NO. 7, APRIL 2019 ISSN 1819-6608
ARPN Journal of Engineering and Applied Sciences

www.arpnjournals.com

BENDING STIFFNESS OF SELECTED TYPES OF GLUED I-BEAMS MADE OF WOOD-BASED MATERIALS

Pavel Dobes[1], Antonín Lokaj[1], Lenka Ponistova[1] and Radek Papesch[2]
[1]VŠB – TU Ostrava, Faculty of Civil Engineering, Ludvíka Podéště, Ostrava - Poruba, Czech Republic
[2]Technical and Test Institute for Construction Prague, the Ostrava Branch, U Studia, Ostrava, Czech Republic
E-Mail: pavel.dobes1@vsb.cz

ABSTRACT

The paper deals with determination of local and global modulus of elasticity of selected glued I-beams. Wooden I-beams consist of flanges made of laminated veneer lumber (LVL) and webs made of OSB. The interconnection of the flanges and the web is realized by glued wedge joint in the so-called neck. Different types of I-beams were subjected to a four-point bending test, where a load-deformation curve was recorded. The experimental results were then compared with an analytical calculation according to the standard for wooden structures design (Eurocode 5).

Keywords: I-beam, web, flange, bending stiffness.

INTRODUCTION

The main objective of the paper is to determine the stiffness parameters of several types of glued I-beams based on data obtained from laboratory destructive testing of real size specimens (see Figure-3), and their comparison with analytical formulae according to the relevant standard. In practical applications of computational procedures, it is an effort to affect the behavior of the beams throughout their lifetime due to the different creep of individual wood materials.

I-BEAMS PROPERTIES

The wooden I-beams are mostly composed of flanges made of solid sawn or laminated veneer lumber (so called LVL), and web made of OSB, plywood or fiberboard (depending on the particular manufacturer). The interconnection is realized by glued wedge joint in the so-called neck. Thanks to the economical distribution of mass, when the mass of the flanges is concentrated far from the center of mass, they have an excellent weight / stiffness ratio compared to solid wood beams, making construction and handling much easier and faster. The flanges must transfer the stresses from the bending moment and the normal force. The web must provide transmission of the shear force. The flanges of solid wood are usually connected by a finger joint, but in case of web connection, butt joints are often sufficient. If wall strengthen is required in the support area, it can be done using wood-based boards which are attached to the web either by nails or gluing [2]; [3].

Glued I-beams are manufactured as prefabricated parts. The suitable gluing temperature is important to ensure the optimal behavior of the joint between the flanges and the web. It is also desirable for the flange surfaces at the neck to be milled just before the gluing and to control the moisture content of the materials [2].

Thanks to their excellent stiffness and strength properties, glued I-beams can be used for ceilings, roofs and walls. The height of the beams is generally between 250 and 500 mm. The height also provides sufficient space for any insulation material. Another indisputable advantage of the use of glued I-beams is the easy realization of perforations. A circular or angular opening can be cut into the web, which can be used for HVAC distribution [4].

Currently, there are many manufacturers around the world, who deal with the manufacture, design and installation of glued I-beams. Many of them also invest into experimental testing of specific products.

DETERMINATION OF STIFFNESS IN BENDING OF I-BEAMS USING LABORATORY TESTS

The stiffness parameters of the I-beams were determined according to standard EN 408+A1 [5] and technical report EOTA (i.e. European Organization for Technical Approvals) [6].

The minimum length of the test specimen is 19 times the height. The method of loading, test arrangement and support of the specimen is illustrated in Figure-1 and Figure-2. One of the supports must allow movement in the longitudinal direction.

Local stiffness in bending

The specimen is subjected to a four-point bending test. The specimen is simply supported with a span equal to 18 times the height (see Figure-1). The load speed must be constant up to the maximum applied load corresponding to 40 % of the estimated maximum load capacity. Deformation w is considered as the mean of the measurements on both sides at the neutral axis. The measured values of deflections corresponding to the individual loading steps are used to create the load-deformation curve. The part of the graph between 10 % and 40 % of the estimated maximum load capacity is used for regression analysis, with a correlation coefficient of 0.99 and better being required [5].

The local stiffness in bending is determined by the formula:

$$EI_l = \frac{(F_2 - F_1)\cdot l \cdot l_1^2}{48\cdot(w_2 - w_1)} \quad (1)$$

Where is

F_2 - F_1 increment of load [N] on the regression line with a correlation coefficient of 0.99 and better;

$w_2 - w_1$ increment of deformation [mm] corresponding to$F_2 - F_1$.

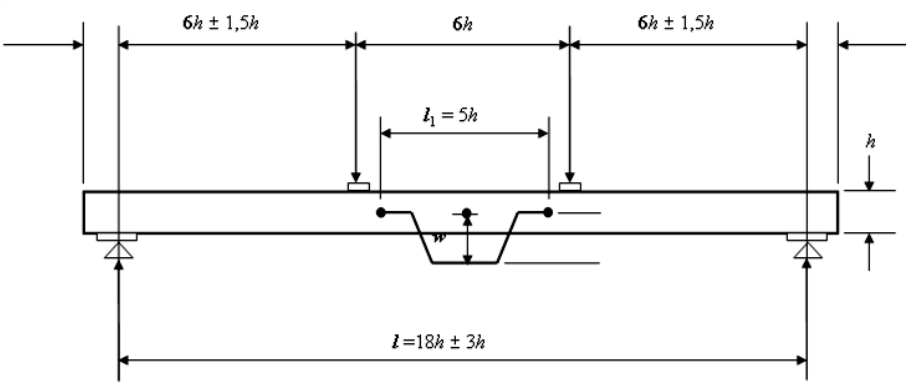

Figure-1. Test arrangement for measuring local modulus of elasticity in bending [5].

Global stiffness in bending

The load method, load layout and support of the specimen are the same as in the test for determination the local modulus of elasticity (see Figure-2). For this reason, both stiffnesses were determined within the same test. Deformation w is measured in the middle of the span and from the center of the tensional or compressional edge. This deformation must include all local pushing that can occur in supports and load points as well as deformation of the supports themselves. Also, the part of the graph between 10 % and 40 % of the estimated maximum load capacity is used for regression analysis, with a correlation coefficient of 0.99 and better being required [5].

The global stiffness in bending is given by the formula:

$$EI_g = \frac{(F_2 - F_1)\cdot(3\cdot a\cdot l^2 - 4\cdot a^3)}{48\cdot(w_2 - w_1)} \quad (2)$$

Where is

$F_2 - F_1$ increment of load [N] on the regression line with a correlation coefficient of 0.99 and better;

$w_2 - w_1$ increment of deformation [mm] corresponding to$F_2 - F_1$;

a distance from the support to the location of load[mm].

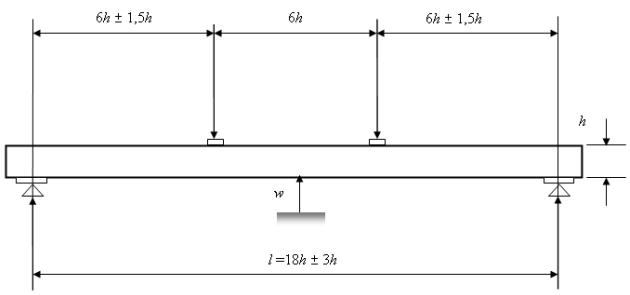

Figure-2. Test arrangement for measuring global modulus of elasticity in bending [5].

Determination of stiffness in bending of I-beams according to Eurocode 5

The calculations assume that flanges and web are glued together to form a single whole. The course of the relative strain over the height of the beam is linear. The beam is made of materials with different moduli of elasticity. Based on this fact, the so-called effective cross-sectional characteristics are determined, which take into account the different stiffness of the materials. The entire profile is considered to be a homogeneous cross-section with the same properties as the flange material. As a result ofthe creep of the components over time, the stiffness in bending must be determined for both instantaneous and final strain [1]; [2].

The stiffness ratio for instantaneous effects is obtained:

$$n_1 = \frac{E_w}{E_f} \quad (3)$$

The stiffness ratio for final effects is obtained:

$$n_2 = \frac{E_w}{E_f} \cdot \frac{1+k_{def,f}}{1+k_{def,w}} \quad (4)$$

Where is

E_w the mean value of modulus of elasticity for the web [MPa];

E_f the mean value of modulus of elasticity for the flanges [MPa];

$k_{def,w}$ the deformation factor for the web [-];

$k_{def,f}$ the deformation factor for the flanges [-].

The effective moment of inertia of the entire cross-section, which is considered homogeneous, is given:

$$I_{y,eff} = I_{y,f} + I_{y,w} \cdot \mathrm{n} \quad (5)$$

Where is

$I_{y,f}$ the moment of inertia of the cross-section consisting only of the flanges [mm^4];

$I_{y,w}$ the moment of inertia of the cross-section consisting only of the web [mm^4];

n the stiffness ratio pro instantaneousn_1, or final n_2 effects [-].

The bending stiffness for the finite state is given:

$$EI_{eff,fin} = I_{y,eff.fin} \cdot \frac{E_f}{1+k_{def,f}} \quad (6)$$

Where is

$I_{y,eff,fin}$ the effective moment of inertia of the entire cross-section for final effects according to (5) [mm^4].

Evaluation of laboratory tests and the results

Four types of glued I-beams were tested for this paper - I241 (64x38); I241 (89x38); I302 (64x38); I302 (89x38)

Figure-3. Test specimen subjected to a four-point bend (Photo: Author).

I241 (64x38), I241 (89x38)

The total height of the beams is 241 mm. LVL flanges have a size of 64 mm, respectively 89 mm in width and 38 mm in height and are provided with a notch of 10x15 mm for gluing an OSB board with a thickness of 10 mm. The geometrical specification of the beams and the test arrangement are shown in Figure-4 and Figure-5.

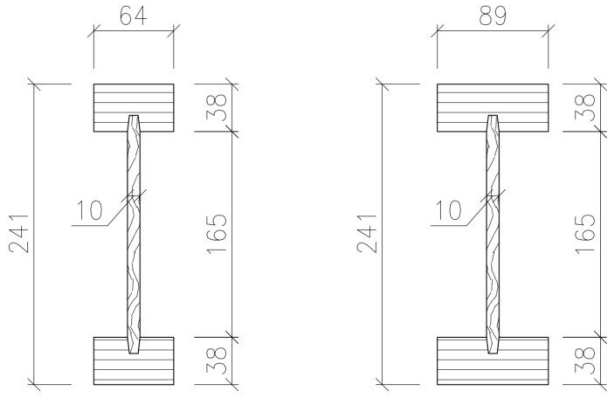

Figure-4. The cross-section of I241 (64x38) and I241 (89x38).

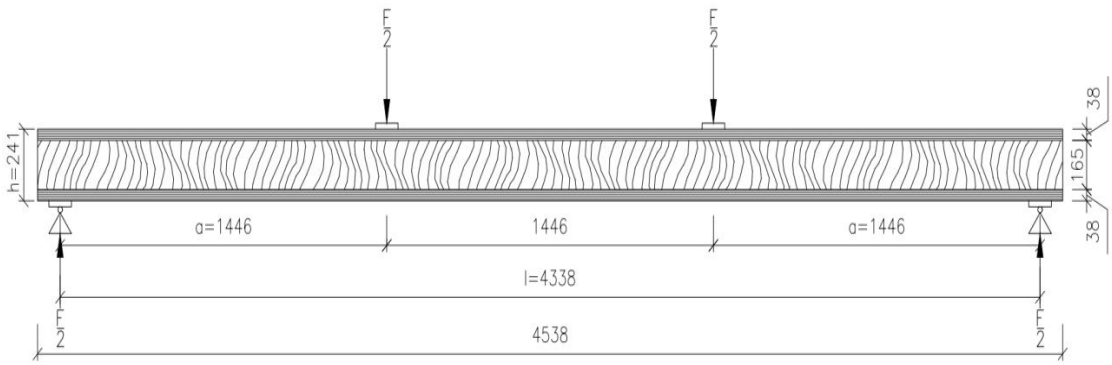

Figure-5. Dimensions of I241 (64x38) and I241 (89x38) and the test arrangement.

Eight specimens of both types were tested. Table-1 and Table-2 show the calculation of the local and the global stiffness in bending based on the results of the experiment according to the above-mentioned formulas. The theoretical bending stiffness for instantaneous effects is shown for comparison.

Table-1. The local and the global stiffness in bending for I241 (64x38).

Type: I241(64x38)	EI_g [kNm^2]	EI_l [kNm^2]
Average	879.1	1067.8
Standard deviation	38.6	229.7
Coefficient of variation	4.39%	21.51%
Theoretical stiffness (instantaneous)	695.4	
Theoretical stiffness (final)	430.2	

Table-2. The local and the global stiffness in bending for I241 (89x38).

Type: I241(89x38)	EI_g [kNm^2]	EI_l [kNm^2]
Average	1105.3	1342.0
Standard deviation	33.9	161.7
Coefficient of variation	3.07%	12.05%
Theoretical stiffness (instantaneous)	972.6	
Theoretical stiffness (final)	603.4	

I302 (64x38), I302 (89x38)

The total height of the beams is 302 mm. LVL flanges have a size of 64 mm, respectively 89 mm in width and 38 mm in height and are provided with a notch of 10x15 mm for gluing an OSB board with a thickness of 10 mm. The geometrical specification of the beams and the test arrangement are shown in Figure-6 and Figure-7.

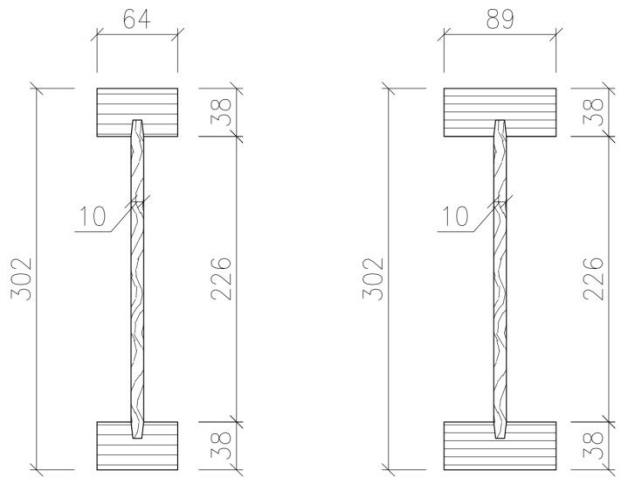

Figure-6. The cross-section of I302 (64x38) and I241 (89x38).

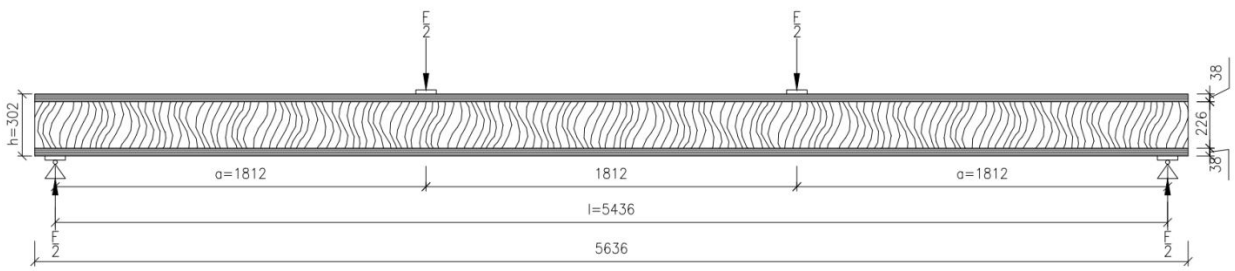

Figure-7. Dimensions of I302 (64x38) and I302 (89x38) and the test arrangement.

Eight specimens of both types were tested. Table-3 and Table-4 show the calculation of the local and the global stiffness in bending based on the results of the experiment according to the above-mentioned formulas. The theoretical bending stiffness for instantaneous effects is shown for comparison.

Table-3. The local and the global stiffness in bending for I302 (64x38).

Type: I302(64x38)	EI_g[kNm^2]	EI_l[kNm^2]
Average	1345.2	1485.6
Standard deviation	34.1	56.5
Coefficient of variation	2.53%	3.80%
Theoretical stiffness (instantaneous)	1180.1	
Theoretical stiffness (final)	727.1	

Table-4. The local and the global stiffness in bending for I302 (89x38).

Type: I302(89x38)	EI_g[kNm^2]	EI_l[kNm^2]
Average	1805.5	2116.1
Standard deviation	38.5	180.3
Coefficient of variation	2.13%	8.52%
Theoretical stiffness (instantaneous)	1646.8	
Theoretical stiffness (final)	1018.8	

DISCUSSION OF THE RESULTS

When calculating the stiffness in bending according to the relevant standard, it is not possible to accurately determine the variability of material characteristics in the strength class of wood and to implement their real material in homogeneities and other uncertainties into the calculation, which can lead to non-negligible inaccuracies, which often may not be on the safe side. It has been verified by experimental testing of real specimens.

Based on experimental testing, it was found that the average bending stiffness of mentioned I-beams is9.6% to 26.4% higher than the theoretically calculated values for instantaneous effects according to the relevant standard. It is evident from the calculations that the theoretical stiffness for final effects is considerably lower due to creep in time.

It can be concluded that the analytical calculation of bending stiffness according to the standard for the design of timber structures EN 1995-1-1 is on the safe side for the mentioned I-beams and it can be reliably used in practice.

CONCLUSIONS

The paper shows the determination of the bending stiffness of glued I-beams based on test data. The average bending stiffnesses of the real specimens were compared to the theoretically calculated values according to Eurocode 5.

For the further research in the given area, I-beams could be tested up to their failure, which would compare the real values of load carrying capacities to the standard calculations. It is also possible to test the I-beams with circular or rectangular holes in the web which are often used in practice forHVAC distribution. This could affect the effect of this modification on the real load carrying capacity.

ACKNOWLEDGEMENT

This paper has been achieved with the financial support of the Ministry of Education, specifically by the Student Research Grant Competition of the Technical University of Ostrava under identification number SP2018/111.

REFERENCES

[1] 2006. EN 1995-1-1. Eurocode 5: Design of timber structures - Part 1-1: General - Common rules and rules for buildings. Prague: Czech Standards Institute.

[2] Blass H.J. 1995. Goerlacher, R. Steck, G. Timber structures. Step 1. Calculation and building materials according to Eurocode. Duesseldorf: Arbeitsgemeinschaft Holz.

[3] Lokaj A., Klajmonová K. 2016. Problems of wood-based I-beams carrying capacity. 3rd International Conference on Structural and Physical Aspects of Construction Engineering (SPACE). NOV 09-11, Slovakia. Book Series: Procedia Engineering. 190: 271-274. DOI: 10.1016/j.proeng.2017.05.336. WOS: 000416996800039.

[4] Leichti RJ, Falk R., Laufenberg TL. 1990. Prefabricated wood composite I-beams: a literature review. Wood Fiber Sci. 22(1): 62-79.

[5] EN 408+A1. Timber structures - Structural timber and glued laminated timber - Determination of some physical and mechanical properties. Prague: Czech Office for Standards, Metrology and Testing, 2012.

[6] European Organisation for Technical Assessment (EOTA) [online]. [cit. 2018-09-09]. Available from: https://www.eota.eu/