VOL. 14, NO. 8, APRIL 2019 ISSN 1819-6608
ARPN Journal of Engineering and Applied Sciences

www.arpnjournals.com

IMPLEMENTATION OF AN INTELLIGENT TEMPERATURE TO VOLTAGE CONVERTER USING ADAPTIVE NEURO-FUZZY INFERENCE SYSTEM

Shyam C V, Aravind R Menon and Naveen Kumar V
School of Electronics Engineering, Vellore Institute of Technology, Vellore, India
E-Mail: vegenaveen@vit.ac.in

ABSTRACT

Thermistor is a very widely used sensor especially for temperature measurement because of its fast response to small temperature changes. The high sensitivity of the thermistor leads to a non-linear behaviour which can give rise to various difficulties such as on-chip integration, direct digital display, wireless capability and so on. So, there arises a requirement for an efficient linearizer to overcome this difficulty. The thermistor is connected to an op-amp signal conditioning circuit (OSCC) which has a stable temperature-voltage relationship over the temperature range 0 °C-100 °C, but suffers with considerable non-linearity of ±12%. In this paper, an adaptive neuro-fuzzy interference system (ANFIS) is used to reduce the non-linearity of the thermistor OSCC. The linearity error is reduced to below ±2% using the proposed methodology and thus making the system suitable to be utilized efficiently for practical applications.

Keywords: adaptive neuro - fuzzy inference system, signal conditioning circuit, operational amplifier, temperature measurement.

INTRODUCTION

Temperature is a physical quantity which is measured, controlled and transmitted to meet industrial needs. A thermal sensor system is an apparatus which is utilized for controlling temperature according to our requirements in industrial and domestic applications. Thus, there arises an issue for the sensors to be linear, accurate, precise, and effective and working at low input power. The output of the sensor should be a faithful representation of the input quantity of the process under measurement. In this case, the physical properties and high sensitivity of thermistor make it the most commonly used thermal sensor [1].

Thermistors are preferable in applications where multiple points have to be measured. They are helpful in circuits where a temperature-resistance and in turn temperature-voltage relationship is required [2]. The advantage that thermistor has over analog and digital integrated circuit based thermal sensors is that it works for different voltage ranges. Keeping in mind the end goal to accurately measure the desired range of temperature, the high sensitivity of a thermistor plays an important part.

There are various linearization techniques utilized as part of an attempt to lessen the non-linearity of the thermistor signal conditioning circuits (SCC). They can be hardware or software based methods of linearization. A variety of analog signal conditioning methods [3-16] have been implemented for the negative temperature coefficient (NTC) thermistors to produce linear or quasi-linear temperature-resistance relation. These methods comprise of different resistor combinations attached to the thermistor sensor which is an integral part of a SCC [3-4]. They produce linear or quasi-linear temperature-resistance change over a narrow range of temperature but with reduced sensitivity. Some of the methods used for linearization connect the thermistor into SCCs having timing circuitry [5-6], log and antilog circuits [7-8], dividers [9], analog multipliers [10-11], analog to digital and digital to analog converters [12-14], waveform generators [15] and voltage controlled oscillators [16].

There are many software methods [17-19] proposed in literature along with hardware methods. An ideal look up table for sensor signal processing and linearization is used [19] where special ROM is employed to store the inverse transfer characteristics of the sensor, but it is a tedious process. An alternative approach to reduce the disadvantages and limitations of the look up table is based on numerical methods such as spline, piecewise linearization and polynomial curve fitting methods [20-21]. The increase in the complexity of sensor characteristic limits the effectiveness of numerical methods. As such, ANN based modelling methods are proposed for the compensation and linearization of various sensors [22-26] to overcome the limitations of the aforesaid methods.

The intelligent linearization methods overcome the limitations of numerical methods. Two common intelligent linearization methods used are namely artificial neural networks (ANNs) and fuzzy logic. In this paper, we propose a different approach, ANFIS which is a hybrid linearization method. This method uses neural networks to model a fuzzy inference system. The uses of ANFIS, smoothness due to fuzzy logic and adaptability due to ANNs motivate the need to develop a hybrid method for linearization of thermistor characteristics. The proposed method consists of two stages of linearization for the thermistor sensor. The first stage is the design of OSCC which produces a steady analog voltage proportional to the sensed temperature. In the second stage, ANFIS is used to further enhance the linearity of the OSCC. An embedded plug in module (PIM) is employed to implement the ANFIS. In section 2, the proposed methodology is described in detail. The experimental setup, ANFIS training and implementation is presented in section 3. Section 4 concludes the work with some important inferences.

METHODOLOGY

The block diagram of the proposed methodology is depicted in Figure-1. The Figure-1 illustrates the

ANFIS-based linearizing scheme for a thermistor connected to an OSCC. A stable output voltage is delivered by the OSCC proportional to temperature sensed by the thermistor. The OSCC output voltage exhibits a non-linearity over range 0 °C -100 °C. This is reduced using ANFIS technique. ANFIS is implemented using an embedded microcontroller unit and its effectiveness is validated using various computer simulations.

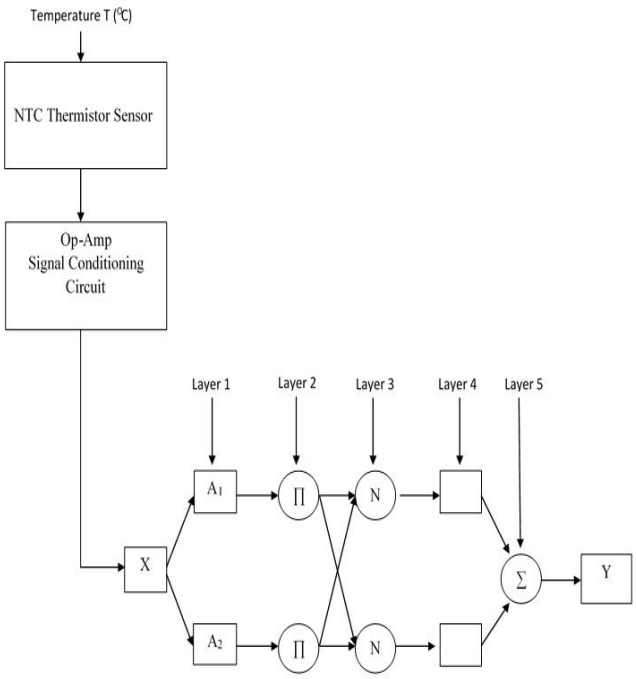

Figure-1. Block diagram of the proposed linearization methodology.

Linearization using OSCC

The temperature-resistance characteristic of an NTC thermistor is expressed as

$$R_T = R_{T_o} e^{\beta\left(\frac{1}{T}-\frac{1}{T_o}\right)} \tag{1}$$

Here, R_{To} is the thermistor resistance of at a reference temperature T_o (°C). β is the characteristic constant of the material used for thermistor. β is temperature dependent and has an operational range from 2000 to 4000 K. The equation. (1) is generally employed for narrow ranges of temperature, whereas Hoge-3 and Steinhart–Hart equations are preferred for broad range of measurement. Figure-2 shows the OSCC circuit which has two op-amps OP07 and an optimal resistor R_p. The optimal resistor is connected in series with thermistor. R_p protects the thermistor from excess heat and current.

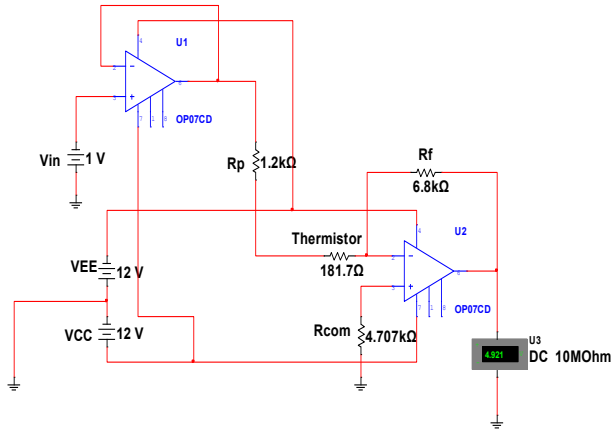

Figure-2. Schematic for OSCC.

Impedance matching is done by the first op-amp which is a buffer and temperature to voltage conversion is done by the second op-amp. R_f is the feedback resistor which provides a stable gain and compensation resistance is provided by R_{com}. The value of compensation resistance and feedback resistor are selected equally for simplicity of operation.

The output voltage of the OSCC is given by the transformation function and is expressed as

$$V_o(T) = \left(\frac{-R_f}{R_p + R_T}\right) V_{in} \tag{2}$$

where $V_o(T)$ is the output voltage of the OSCC and it depends on the input temperature sensed by the thermistor, V_{in} represents the reference voltage applied to the positive terminal of the voltage follower. The temperature-resistance coefficient of the thermistor α is computed as

$$\left(\frac{dR_T}{dT} / R_T\right) = \alpha = \frac{-\beta}{T^2} \tag{3}$$

By computing the first and second derivatives of equation. (2), the transformation function of the OSCC is illustrated by equation. (4) and equation. (5).

$$\frac{dV_o(T)}{dT} = \frac{-R_f R_T \beta V_{in}}{T^2 (R_p + R_T)^2} \tag{4}$$

$$\frac{d^2 V_o(T)}{dT^2} = \frac{R_f R_T \beta V_{in}\left(2T\left(R_p + R_T\right) + \beta\left(R_p - R_T\right)\right)}{T^4\left(R_p + R_T\right)^3} \tag{5}$$

The optimal value of R_p for the specified range of temperature is calculated by equating the second derivative of equation (2) to zero; we obtain

$$R_p = R_{T_c}\left(\frac{\beta - 2T_c}{\beta + 2T_c}\right) \quad (6)$$

where, T_c is the midpoint or central temperature of the specified linearized range. From equation. (6), the estimation of R_p is calculated in the predetermined range of temperature. The estimations of R_p as well as R_T are independent of the reference voltage V_{in} and the selection of R_f. The linearization of the transformation characteristic function, i.e., if $X = F(Y)$ and $Y = \overline{F}(Z)$, then $X = Z$ relies upon the technique of reciprocal transformations[27].The linearization of the highly non-linear exponential characteristic of the thermistor is accomplished based on the reciprocal transformations $V = F(R_T)$ and $R_T = F(T)$. It can be presumed from the transformation function, that the feedback resistance R_f can just impact the circuit pick up, affectability and the desired magnitude of output voltage margin of the OSCC can be chosen through R_f.

Linearization using ANFIS

The ANFIS incorporates the advantages of ANNs and fuzzy logic to create a better soft computing method. Fuzzy logic can change quantitative aspects of knowledge into precise qualitative analysis using linguistic expression. However, the course of transformation into rule based fuzzy inference system (FIS) is tedious and adjustment of membership functions (MF) is time consuming [28]. Therefore, ANN can be operated in the adjustment of membership functions and determination of rules in fuzzy logic. The ANFIS model being used is shown in Figure-3. The architecture uses an adaptive network which uses a model similar to Takagi-Sugeno Fuzzy Inference system and a hybrid learning algorithm [29].

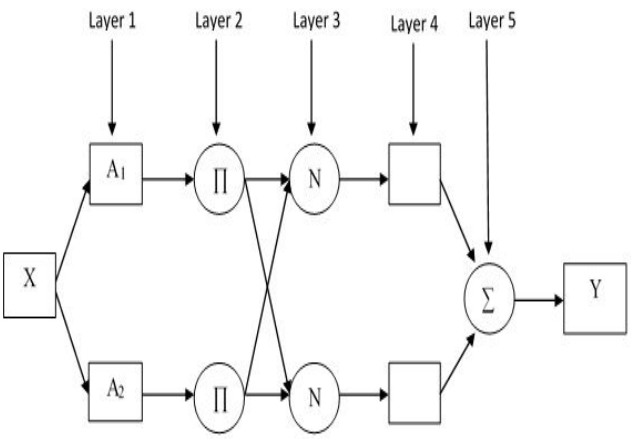

Figure-3. Block diagram of ANFIS architecture.

Layer 1 represents the fuzzification of input variables represented by x and the determination of the number and type of membership functions. A generalized bell membership function is used in this paper. A_1 and A_2 represent the fuzzy variables. This layer consists of adaptive nodes. The output of the first layer is the membership functions of the input variable denoted by μ_{A_i}.

$$\mu_{A_i}(x) = \frac{1}{1 + \left|\frac{x - c_i}{a_i}\right|^{2b}} \quad (7)$$

Parameters in layer 1 represented by {*a, b, c*} are called premise parameters.

Layer 2 passes the same output as layer 1 since there is only one input. In the case of two or more inputs, the membership functions of the different inputs are multiplied.

$$W_i = \mu_{A_i}(x) \quad (8)$$

The firing strength of a rule is being characterized by W_i. Each node is non-adaptive.

Layer 3 does the normalization of the outputs of layer 2. All nodes are non-adaptive. The normalized values are given as

$$\overline{W} = \frac{W_i}{\Sigma_i W_i} \quad (9)$$

Layer 4 gives the output in the form of

$$W_i F_i = \overline{W}\left(p_i x + q_i y + r_i\right) \quad (10)$$

All nodes are of adaptive nature. Here p_i, q_i, r_i are referred as consequent parameters which are updated by least squares estimation.

Layer 5 consists of one non-adaptive node which sums up all the signals emanating from layer 4 and weighted sum is given by

$$\Sigma_i W_i f_i = \frac{\Sigma_i W_i f_i}{\Sigma_i W_i} \quad (11)$$

Hybrid learning algorithm

The non-adaptive nodes in layer 1 and layer 4 can be modified over time. These parameters are updated using combination of back propagation gradient descent and least squares estimation. This is called hybrid learning algorithm. One stage of hybrid learning is called an epoch [30]. The Table-1 describes the learning pattern.

Table-1. Learning pattern of ANFIS.

Type	Path forwards	Path backwards
Premise Parameters	Fixed	Gradient Descent
Consequent Parameters	Recursive Least Squares Estimation	Fixed
Signal	Node output	Error Rate

Forward pass

In the forward pass, the premise parameters are fixed while the consequent parameters are updated by least squares estimation. The output is obtained by linearly combining the consequent parameters. The output is given as

$$f = \overline{W}_1 f_1 = \overline{W}_1 \left(p_1 x + q_1 y + r_1 \right) \tag{12}$$

The consequent parameters are given by p_1, q_1, r_1. equation. (12) can written as

$$f = YW \tag{13}$$

If Y matrix is invertible, then

$$W = Y^{-1} f \tag{14}$$

Otherwise a pseudo-inverse method is utilized to find the solution

$$W = \left(Y^T Y \right)^{-1} Y^T f \tag{15}$$

Backward pass

Assume the network has 5 layers and layer-Q has $W(Q)$ nodes. The number of square error in the Q layer to p data is $1 \le p \le W$ and is characterized as

$$E_p = \Sigma_{k=1}^{W(Q)} d_k - X_{k,p}^{Q} \tag{16}$$

d_k - k^{th} component of desired output vector

$X_{k,p}^{Q}$ - k^{th} component of actual output vector

Error rate is calculated as

$$\varepsilon_{Q,i} = \frac{\partial E_p}{\partial X_{i,p}^{Q}} = -2\left(d_{i,p} - X_{i,p}^{Q} \right) \tag{17}$$

Internal error rates can be computed using chain rule

$$\frac{\partial E_p}{\partial X_{i,p}^{Q}} = \Sigma_{m=1}^{W(q+1)} \frac{\partial E_p}{\partial X_{m,p}^{q+1}} \frac{\partial X_{m,p}^{q+1}}{\partial X_{m,p}^{q+1}} \tag{18}$$

where $0 \le q \le Q-1$. When a parameter β is used in a node, equation changes to

$$\frac{\partial E_p}{\partial \beta} = \Sigma_{X^* \in S} \frac{\partial E_p}{\partial X^*} \frac{\partial X^*}{\partial \beta} \tag{19}$$

S indicates the set of nodes containing β. equation. (19) can be represented as

$$\frac{\partial E}{\partial \beta} = \Sigma_{p=1}^{p} \frac{\partial E_p}{\partial \beta} \tag{20}$$

Repairing the parameters of equation. (1), β is obtained by

$$\Delta\beta = -\eta \frac{\partial E}{\partial \beta} \tag{21}$$

The learning rate process η is given by

$$\eta = \frac{k}{\sqrt{\Sigma \alpha \left(\frac{\partial E}{\partial \beta} \right)^2}} \tag{22}$$

where k denotes step size.

RESULTS

Experimentation

The experimentation of the proposed methodology is given in Figure-4. A commercially available thermistor is utilized for this experiment. The thermistor used in this experiment is Vishay NTCLE101E3472SB0 which has an R_{To} = 4.7kΩ and β = 3977K. The experiment is performed in the temperature range of 0°C-100°C using a water bath.

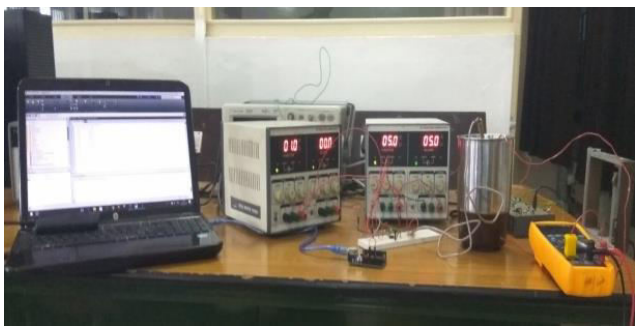

Figure-4. Experimental setup.

The values of temperature and resistance are measured using a multimeter which provides an accuracy of ±0.5 %. The plot of temperature vs. resistance of the thermistor is shown in Figure-5. Temperature is taken at an interval of 3 °C. The resistance R_p of the signal conditioning circuit is obtained using the transformation technique. The feedback resistance's value is chosen such that the output of the signal conditioning circuit is in between 0-5 V.

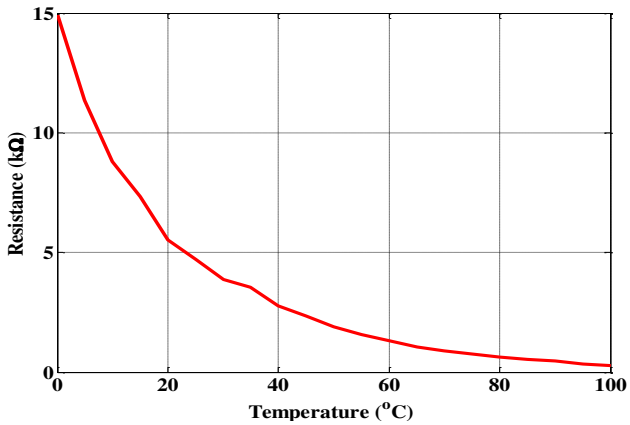

Figure-5. Temperature-resistance characteristics of the thermistor.

ANFIS training

The input to ANFIS is the normalized output of the signal conditioning circuit. The target data is straight line with unitary slope. A fuzzy inference system is created for the input data with the required membership functions. Forward pass utilizes a least mean squares method and backward pass utilizes back propagation gradient descent to decrease the error between input data and target data. The step size has been reduced from 0.0119413 to 0.00682137. ANFIS is implemented using MATLAB. The output graph is shown in Figure-6.

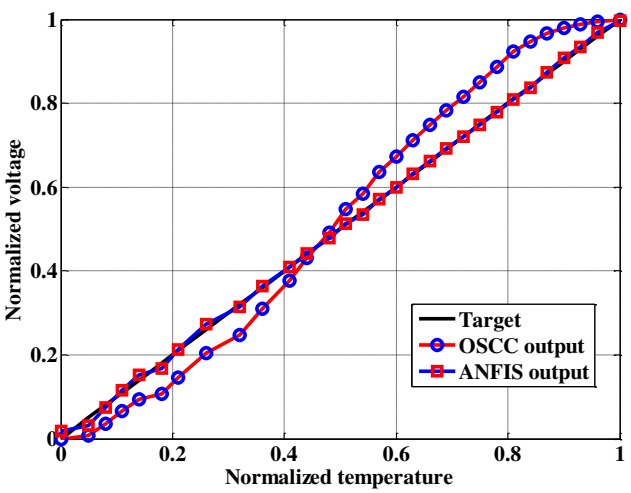

Figure-6. Temperature-voltage characteristics of the OSCC and the ANFIS.

Error analysis

The linearity error in percentage is obtained by

$$\varepsilon = \frac{OR - TR}{FSV} \times 100 \tag{23}$$

where ε is the linearity error in percentage, OR is the measured reading, TR is the true reading and FSV is the full scale value of measurement. The linearity error graph for the OSCC output and ANFIS output is depicted in Figure-7. The linearity error of the bare thermistor is ±47% which is reduced to ±12% by OSCC. The ANFIS technique further minimizes the linearity error to ±1.98% approximately.

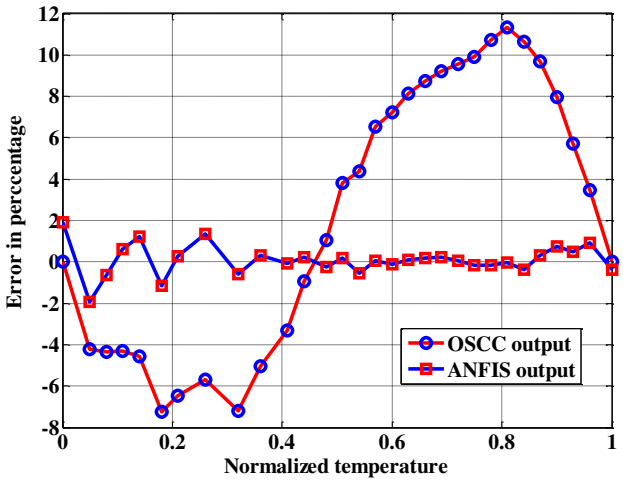

Figure-7. Error analysis of the OISCC and the ANFIS.

DISCUSSIONS

General methods like numerical methods can be utilized for the linearization of the sensor. Numerical methods are not advisable as a separate look up table is needed for each sensor based on its characteristic value and in this case it is β value. The suggested method consists of an ANFIS network which can be used for multiple thermistors. Curve fitting methods need the entire calibration results for correction coefficient evaluation. Calibration values are obtained using permutations in [31]. Data noise and sensor resolution prove as a hindrance in [32]. ANFIS provides linearization for much less calibration points than numerical methods. Convergence rate of ANFIS is much more accelerated than neural networks. The size of the required training set is small. Number of parameters required for ANFIS is much less than numerical methods.

CONCLUSIONS

In this paper, ANFIS-based linearization is utilized for thermistor circuit. The signal conditioning circuit, OSCC reduces linearity error of bare thermistor from ±47% to ±12%. ANFIS further minimizes the linearity error of OSCC to ±1.98%. ANFIS has a low cost computational topology. The future scope of the work is to develop a smart, miniature dynamic module with internet

of things suitable for effective measurement and monitoring of physical quantities. The proposed method can be extended to other nonlinear sensors implemented in many practical situations.

REFERENCES

[1] P. A. Ramon and J. G. Webster. 2013. Sensors and Signal Conditioning. John-Wiley.

[2] N. K. Vaegae and V. L. N. Komanapalli. 2015. Development of Thermistor Signal Conditioning Circuit using Artificial Neural Networks. IET Science, Measurement & Technology. 9: 955.

[3] J. M. Diamond. 1970. Linearization of Resistance Thermometers and Other Transducers. Review of Scientific Instruments. 41: 53.

[4] D. Patranabis S. Ghosh and C. Bakshi. 1988. Linearizing transducer characteristics. IEEE Transactions on Instrumentation and Measurement. 37: 66.

[5] D. Stankovic and J. Elazar. 1977. Thermistor Multivibrator as the Temperature-to-Frequency Converter and as a Bridge for Temperature Measurement. IEEE Transactions on Instrumentation and Measurement. 26: 41.

[6] D. K. Stankovic and J. Elazar. 1977. Thermistor Multivibrator Bridge with the Variable Balancing Point Position. IEEE Transactions on Instrumentation and Measurement, 26: 358.

[7] A. Khan and R. Sengupta. 1984. A Linear Temperature/Voltage Converter Using Thermistor in Logarithmic Network. IEEE Transactions on Instrumentation and Measurement. 33: 2.

[8] Khan. 1985. An Improved Linear Temperature/Voltage Converter Using Thermistor in Logarithmic Network. IEEE Transactions on Instrumentation and Measurement, 34: 635.

[9] J. Kim and J. D. Kim. 2011. Voltage divider resistance for high-resolution of the thermistor temperature measurement. Measurement. 44: 2054.

[10] A. Khan, M. Al-Turaigi and A. Alamoud. 1988. Linearized thermistor thermometer using an analog multiplier. IEEE Transactions on Instrumentation and Measurement. 37: 322.

[11] S. Natarajan. 1990. A modified linearized thermistor thermometer using an analog multiplier. IEEE Transactions on Instrumentation and Measurement. 39: 440.

[12] S. Natarajan and B. B. Bhattacharyya. 1977. Temperature-to-Time Converters. IEEE Transactions on Instrumentation and Measurement. 26: 77.

[13] D. R. C. A. D. Muñoz, E. C. Montero, J. S. Moreno, S. C. Berga, A. N. Antón, J. F. Barrio and A. S. Mustelier. 2010. Difference temperature-to-time electronic interface based on a thermistor- to-generalized impedance converter. Measurement. 43: 1668.

[14] B. Sundqvist. 1983. Simple, wide-range, linear temperature-to-frequency converters using standard thermistors. Journal of Physics E: Scientific Instruments. 6: 261.

[15] R. Sengupta. 1988. A widely linear temperature to frequency converter using a thermistor in a pulse generator. IEEE Transactions on Instrumentation and Measurement. 37: 62.

[16] V. L. N. Komanapalli and Bhujunga Rao. A. 2012. A novel method of linearizing thermistor characteristic using voltage controlled oscillator. Sensors & Transducer Journal. 136: 1.

[17] Patranabis and D. Ghosh. 1989. A novel software-based transducer linearizer. IEEE Transactions on Instrumentation and Measurement. 38: 1122.

[18] S. Ghosh and D. Patranabis. 1992. Software based linearisation of thermistor type nonlinearity. In: Proc. of IEE G Circuits, Devices and Systems. 139: 339.

[19] A. Flammini, D. Marioli and A. Taroni. 1999. Application of an optimal look-up table to sensor data processing. IEEE Transactions on Instrumentation and Measurement. 48: 813.

[20] X. Wang, G. Wei and J. Sun. 2011. Free knot recursive B-spline for compensation of nonlinear smart sensors. Measurement. 44: 888.

[21] J. Pereira, O. Postolache and P. Girao. 2009. PDF-Based Progressive Polynomial Calibration Method for Smart Sensors Linearization. IEEE Transactions on Instrumentation and Measurement. 58: 3245.

[22] N. K. Vaegae and V. L. N. Komanapalli. 2016. Development of an ANN-Based Pressure Transducer. IEEE Sensors Journal. 16: 53.

[23] V. L. N. Komanapalli and N. K. Vaegae. 2016. Development of an Intelligent Temperature Transducer. IEEE Sensors Journal. 16: 4696.

[24] Kumar V. N and K. V. L. Narayana. 2017. Development of an intelligent pressure sensor with temperature compensation. Journal of Engineering Science and Technology. 12: 1723.

[25] J. C. Patra, A. C. Kot and G. Panda. 2000. An intelligent pressure using neural networks. IEEE Transaction on Instrumentation and Measurement. 49: 829.

[26] Marwin K Mathew, Rahul George J Valooran and Naveen Kumar Vaegae. 2017. An effective temperature monitoring scheme using ANN-based fiber Bragg grating sensor. International Journal of Intelligent Engineering and Systems. 10: 109.

[27] Volgin L. I. 1971. Electrical transducers for measurement instruments and systems. Sovetskoe Radio. Moscow. Russia.

[28] J.-S. Jang. 1993. ANFIS: adaptive-network-based fuzzy inference system. IEEE Transactions on Systems, Man, and Cybernetics. 23: 665.

[29] J. P. S. Catalao, H. M. I. Pousinho and V. M. F. Mendes. 2011. Hybrid Wavelet-PSO-ANFIS Approach for Short-Term Wind Power Forecasting in Portugal. IEEE Transactions on Sustainable Energy. 2.

[30] M. A. DenaI, F. Palis and A. Zeghbib. 2004. ANFIS Based Modelling and Control of Non-linear Systems: A tutorial. In: Proc. of International Conf. on Systems, Man and Cybernetics. The Hague. Netherlands.

[31] J. Rivera, G. Herrera and M. Chacón. 2009. Improved progressive polynomial algorithm for self-calibration and optimal response in smart sensors. Measurement. 42: 1395.

[32] S. Rahili, J. Ghaisari and A. Golfar. 2012. Intelligent Selection of Calibration Points Using a Modified Progressive Polynomial Method. IEEE Transactions on Instrumentation and Measurement. 61: 2519.