VOL. 14, NO. 8, APRIL 2019 ISSN 1819-6608
ARPN Journal of Engineering and Applied Sciences

www.arpnjournals.com

DESIGN AND IMPLEMENTATION OF INTERNET OF THINGS (IOT) BASED LOCALIZATION SYSTEM FOR LIBRARY BOOK USING FPGA

Muataz H. Salih and Cherlyn Tan Li Kuan
School of Computer and Communication Engineering Universiti Malaysia Perlis, Perlis, Malaysia
E-Mail: muatazhameed@gmail.com

ABSTRACT

Smart buildings became a significant demand for smart cities and industry 4.0 era. Current libraries are suffering from misplacement books that almost considered lost. A manual search conduct by librarian to overcome this problem and it consumes much time and work. An FPGA-IoT based localization system is designed with RFID technology as a detection source. Proposed localization system comes with an aim of replacing the traditional barcode system and emerge a technology breakthrough of fusing the physical and digital world. A localization mechanism and check-in/out mechanism built based on the data from RFID readers and tags. The misplacement of books detected and the original location of the books displayed in terms of shelves and rows. Emerging with IoT, communication between the multiple shelves and communication between android application and users is built to enable high availability and accessibility of books for both management and user. The proposed design achieved high operating frequency (1.6GHz) and optimized on chip resources logic elements such as MegaCores, FSM and 2-Port RAM. The proposed design seeks to provide dynamic reconfigurable platform with the knowledge and tools needed to improve in today's academic, research and industry environment.

Keywords: industry 4.0, IoT, localization system, FPGA.

INTRODUCTION

The system of indoor localization is a system of indoor navigation which navigate people to locate or track personnel, items and etc. This system are useful in the field of library, hotels, hospital and more to reduce the time consumption in searching and finding certain books, rooms or patients.

Besides, the system is use to navigate people in a building such as library to the correct location of the items in this case is books. The major function of indoor localization system of a library is to track the wrongly place books and navigate users to locate the target book. This project will be designed to maximize the main usage of the indoor localization of library with some modification.

The modification will allowed users to locate the target books even it is wrongly place by others. Hereby, the library localization system made up of two parts, one is the misplacement of books and second is the navigation to the books. In misplacement, the current position of the wrongly place books will be located and informed to the administrator for correction. The students will also be able to locate the current location of the wrongly place targeted books. In navigation, the books location will be displayed in terms of levels, shelf's names and column. This details will be updated when the location of the books varies.

With multiple of data being inputted to the system concurrently, a significant level to of parallelism will be needed to assist the system operation. The communication of multiple column in a bookshelf will be established in this project together with the communication between multiple bookshelves. The implementation of connecting hardware to hardware to people emerge a technology revolution with industrial 4.0.

Design challenge on radio frequency identification (RFID)

Radio Frequency Identification (RFID) was developed at the beginning of the twentieth century. The first RFID device was created at 1946 by a Russian physicist, Leon Theremin. RFID combines the radar and radio broadcast [1] technology with the relationship of electricity and magnetism. There was a rise of interest in RFID implementation [2] in the indoor environment such as libraries and etc due to its tracking ability and efficiency.

The RFID technology grew with the demand of replacing the traditional borrow-return procedure, labor and slow productivity of paper-bounded process [3]. The demand of tracking and tracing the position of item increases with the urge of time reduction in searching items.

Tag readability

In RFID, the passive tags are the input and the readers are the receiver. The transmission of signals between the input and the reader was transmitted by antenna. The reading efficiency was being tested using microstrip line antenna and patch antenna [3] respectively. The patch antenna was installed at the side of the cabinet with the width of 110mm and height of 79.5mm. In patch antenna approach, it was found that reading efficiency was extremely high at the side of the cabinet and was extremely low at the center of the cabinet.

The approach of involving microstrip line antenna was being installed in two positions. One of position was installing the microstrip line antenna at the bottom of the shelf. The reading efficiency of the horizontally placed tags at the bottom of the books was

higher than the reading efficiency of horizontally placed tags on the middle and the top of the books. The reading efficiency of horizontally placed books decreases with the books stacks increases.

Another position was installing microstrip line antenna at the back of the shelf. The reading efficiency of the horizontally placed tags at the bottom of the books was higher that the horizontally placed tags on the middle and the top of the books but was lower than the reading efficiency of the mounted bottom microstrip line antenna. The results were opposite with the tags placed vertically at the most outside of the books. The reading efficiency with that placement of tags was higher in mounted back microstrip line antenna than mounted bottom microstrip line antenna.

Smart cabinet was a good approach upon reading the tags on the specific shelf itself. The efficiency of the reading was based on the position of antenna and tags. All tags were successfully read and the errors of the missed were almost none. Unfortunately, the books that were being wrong placed at others shelves or columns were not able to be detected. The books of being declared lost or stole will be high and user experience decreases with high misplacement of books often occurred.

Coverage

Coverage is one of the most important factors in considering the type of readers and tags to be used in an environment. The importance of considering this factor is to prevent interference between two readers coverage. Overlapping of signal may cause an existence of blind spot area. Their coverage consist of three different parts as stated below.

a. Signal coverage

Signal coverage is the covered coverage areas of readers. The tags that were under these specific coverage areas of specific reader will be read in terms of the item's details and location. RFID readers had the ability of reading multiple tags once but it will experienced destructive and caused multi-path propagation signal [4] error by reading the same tags repeatedly. Smart RFID cart was one of the past approaches to experiment on the signal coverage.

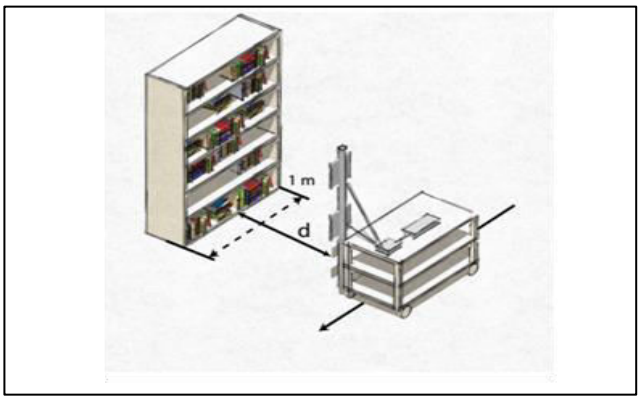

Figure-1. The setup of bookshelf and smart cart [4].

The smart cart was setup with two antenna at the reader and connected to one reader port such as multiplexer or splitter shown in Figure-1. The smart cart will be experiment in four scenarios mobility and immobility with multiplexer and splitter respectively. The condition of immobile scenarios was created by placing the smart cart in front of the bookshelf in static. While, in mobile condition, the smart cart was moved back and forth in front of the bookshelf.

In immobility scenario, a blind spot coverage was found due to the limitation of reader's coverage. The existence of limitation was because static readers can only covered a static coverage. In mobility scenario, the blind spots was addressed but the signal connection became unstable. The probability of tags identification increases due to reduction of blind spot coverage but the transmission time increases due to alteration of position.

The smart cart was placed at three distance, 0.5, 1, 2 meter to experiment the blind spot coverage and the accuracy of the tag identification. In immobility condition, the blind spot coverage increases with the distance between the smart cart and the bookshelf increases. The accuracy decreases with the increases of blind spot coverage. In mobility condition, the blind spot coverage was smaller than the blind spot coverage of immobility condition. The accuracy of tag identification was better than the accuracy of tags identification of immobility condition but the transmission time is longer.

The setup of the splitter took longer time than the setup of multiplexer because of the distance of antenna had to be closed and propagated at a different angle for smooth transmission of signal between readers and tags. Splitter was useful in single antenna condition as it is able to increase the pattern of radiation.

The smart cart approach was good because of the capability of blind spot reduction. Tags at all corner of the bookshelf were able to be read. Yet, the smart cart concept is inconvenient in a large indoor space. In large door space, there will be multiple of bookshelf at multiple area. The real-time tracking will be affected because the slow-mobility of the smart cart. It was also inconvenient to move in between shelves as the distance of two shelves were relatively small for a wide dimension of smart cart.

b. Reader's coverage

The reader's coverage is the radius covered by the reader for tag identification. The reader will be able to read the tags inside this radius. Combination of multiple reader can developed a tracking function. One of the past approach was book-locating [5] using different layout of readers.

There were two layout of readers. One of the layout was in rhombus form and another layout is rectangular form. Both form had four side readers and a central reader. The design is shown in Figure-2. Both layouts form were experimented in two mode, single book mode and book list mode.

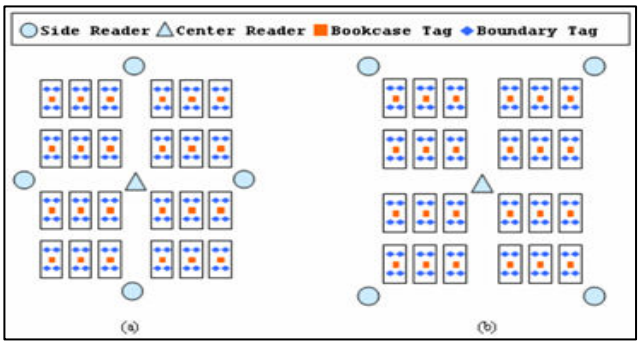

Figure-2. Layout of Stimulation.

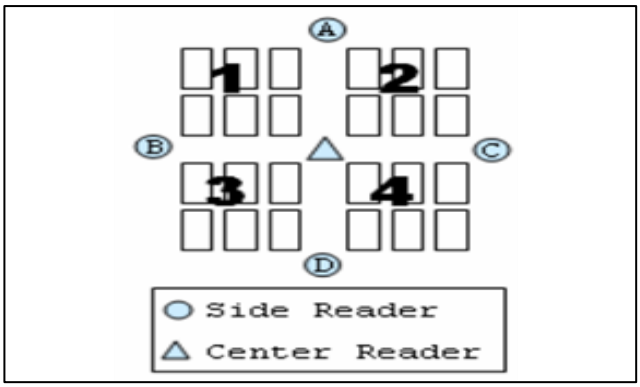

Figure-3. Layout of RFID readers [5].

Single book mode was a mode of tracking the exact location of the single book. By labeling the bookshelves into four sections shown in Figure-3, if the book was placed in the first section, the book will be detected by reader A and B. The location of the books was predicted using the calculated Euclidean distance.

$$E_j = \sqrt{\sum_{i=1}^{m} (\theta_i - S_i)^2}$$

S = Signal strength vector of the tracking tag,
θ = Signal strength vector of the bookshelf tag,

Book list mode was a mode of listing the misplaced books in the bookshelves. The records of misplaced books was convenient for librarian to placed back the book at its original place. Each books in each shelves were given different power level. When the power level of specific tags does not match the power level of reader at the section. The book will be labeled as misplacement.

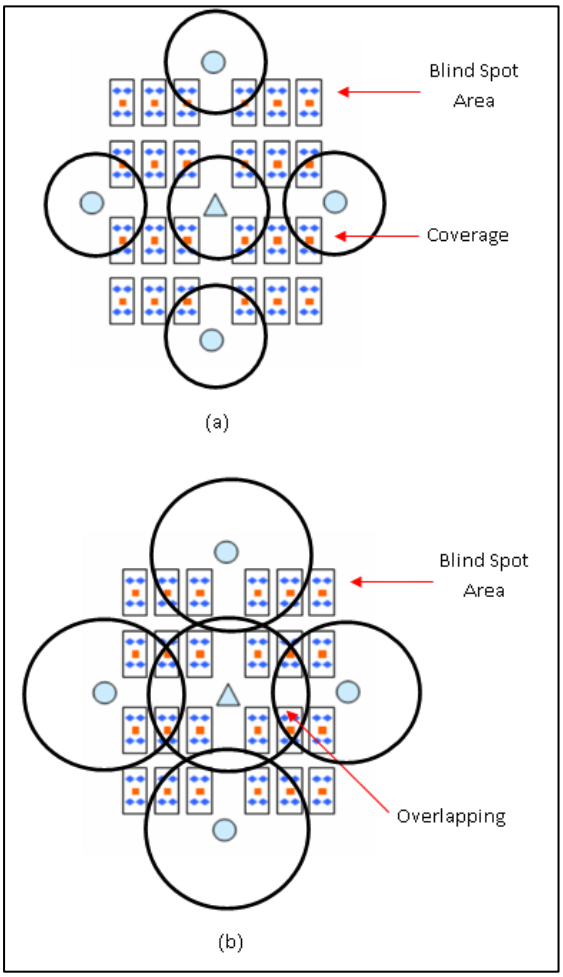

Figure-4. (a) Blind spot coverage (b) Overlapping.

The approach was good in tracking the location of the single book and the misplaced books. The approach had a major drawback of overlapping signal and blind spot coverage. The drawbacks are demonstrated in Figure-4 Overlapping signal and blind spot coverage will reduce the accuracy of tag identification.

Design challenge on internet of things (IoT)

Internet of Things is the connection of wired or wireless network using the same Internet Protocol (IP) to link physical object to another physical object. Internet of Things is growing in the terms of connecting everything to everything. The industrial had undergo several revolution. The first revolution was exploiting machine and skilled workers. The second revolution was exploiting on the natural and synthetic resources. The third revolution the software was developed to handle the machinery. The forth revolution starts at the 21st century with the aim of developing communication between machinery instead of going through the central brain. With the beginning of forth revolution, Internet of Things grew in popularity and being used as a tool to complete this revolution.

With IoT, valuable data can be gained through the improvement of operation, safety and security. Communication between vehicles through IoT can reduce

accident and safe lives, communication between hospital can increase the probability of patient's survival rate and etc. The importance of IoT is growing and increase the demand of knowledgeable workers to complete the industrial revolution.

Android application

Android application is a back-end service provided to ease user experience. One of the past approach was developing an android application for library localization system. The android application was developed using Android Studio software. Figure-5 is the architecture of the android application [8]. The android mobile device was installed with a software scanner for manual tracking and positioning of the tags.

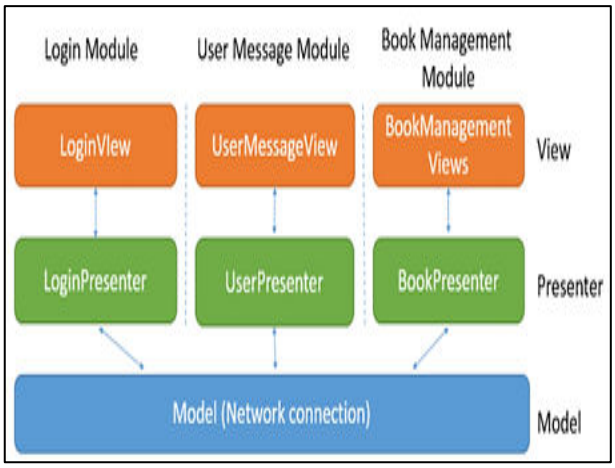

Figure-5. The architecture of android application [8].

The android application was built with three module, Login module, User Message Module and Book Management Module. The user had to login into their account for verification. The user can contact the administrator personally using the user message module and the administrator can update the inventory using the book management module.

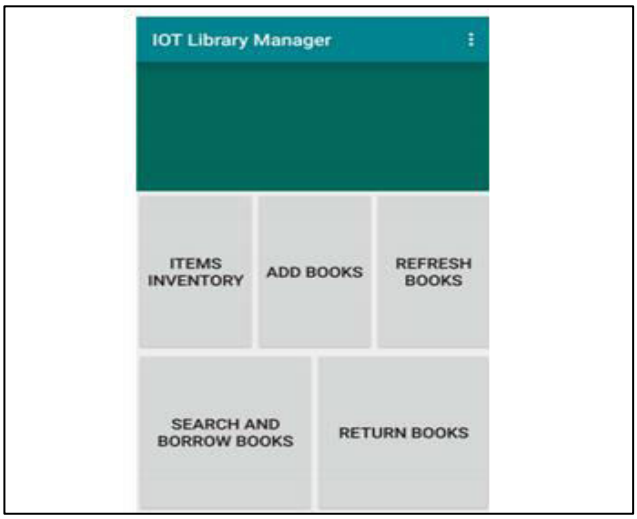

Figure-6. The user interface of main entry [8].

With android application, the students can check the availability of the books and execute borrow-return of books easily. While, the administrators responsibility of keeping the inventory update will be eased shown in Figure-6. Unfortunately, the localization of the books were carried out by using a software scanner. The inconvenient occurred when exist of large quantity of bookshelves.

Design challenge on field programmable gate array (FPGA)

Xilinx, Ross Freeman was one of the FPGA developers in the mid-1980s. A semiconductor device was developed by including logic elements, interconnection and IOB (Input/Output Blocks). Hardware Description Language (HDL) was specified for configuration which was similar to the configuration of an application-specific integrated circuit (ASIC).

The high adaptability and reconfigurability of FPGA had been used to perform parallelism. The FPGA has advantages of improving the system performance and reduction of system spill-over energy. The reconfigurable characteristic of FPGA optimized the hardware circuit according to the customize application. Moreover, using FPGA can reduce the component usage in a system which in turn, cost reduction, time-to-market improvement, flexibility and extandibility [13].

FPGA architecture review

The Altera IP core is the interface built to connect FPGA board and host. There are two engine exist in this interface completion engine and request engine. The headers and the realignment of data can be create or decode by these engine. The address and size of the Dynamic Memory Access will be programmed by host and stored in register files. With the parameter in the register file, the auto-configuration of driver can be done using the reflected information. The system overview is shown in Figure-7.

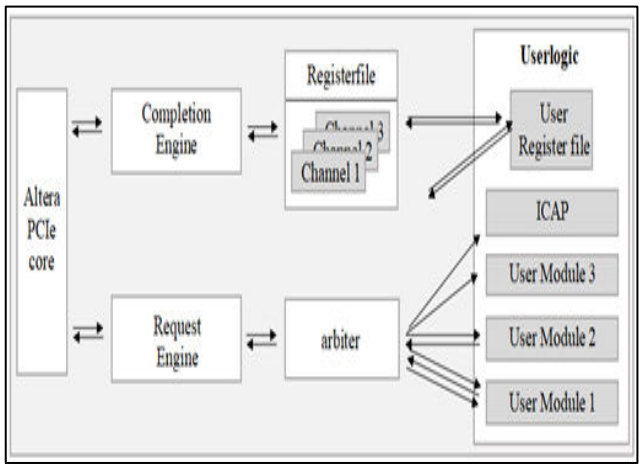

Figure-7. Overview of FPGA architecture.

FPGA - To - FPGA communication

FPGA - FPGA communication is a communication between two FPGA board without

intervention from host through wired or wireless connection. In FPGA - FPGA communication [14], the buffers at both ends were limited. To overcome come this limitation, one of ends need to inform the availability of the buffer space to another end. For example, one of communicating FPGA will send a request for data when the buffer space is sufficient. Then, a master module is generated according to the send-command. The function of arbiter is to ensure the availability of buffer space before sending data. The point - to - point transmission bypass the system memory in turn reduce the access time and memory bandwidth. The point - to - point transfer is shown in Figure-8.

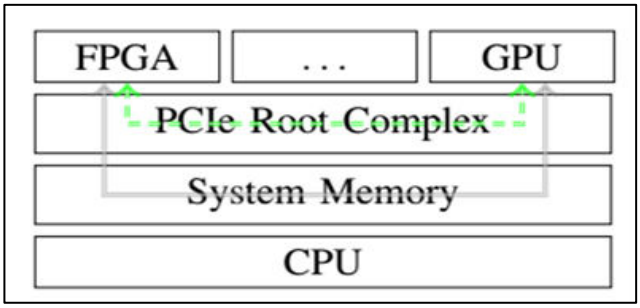

Figure-8. Point - to - point transfer of FPGA - FPGA communication [14].

FPGA - To - host communication

FPGA - Host communication is a communication between FPGA boards and a Host, PC through wire or wireless connection. The transmission handler between host and FPGA is FPGA. The command will be programmed by the driver into the register files for setting sufficient memory space on the host side. It is different from FPGA - FPGA communication as no request is needed to be send to host for buffer availability confirmation. The function of arbiter is to ensure the sufficient data availability before packet transmission instead of checking sufficient buffer availability.

FPGA - based SQL query

FPGA - based SQL query is one partial reconfiguration approach. This approach was implementing query - to - hardware compiler and libraries [15]. The implementation was to generate very high-speed integrated circuit hardware description language, VHDL file by converting the algebraic query plan into appropriate digital circuit.

SQL database was built using SQL command using VHDL code. Partial reconfiguration module existed in the hardware pipeline was transformed from SQL query. A library of predefined SQL operator module was built for assembling the element's data path. The input will be filtered through the restriction terms and only the fulfilling restriction record will be streamed as tuple data. The overview of the approach is shown in Figure-9.

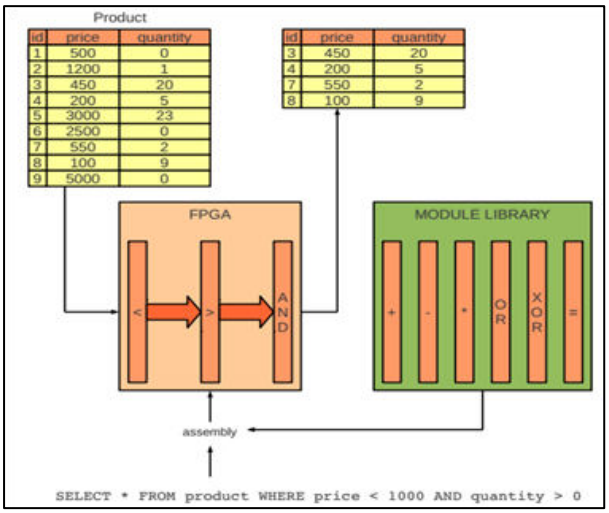

Figure-9. Overview of FPGA - based SQL query [15].

The FPGAs are integrated circuits that can be customised by the user for implementing arbitrary digital functions. The modem FPGAs can combine the general logic resources with the microprocessors, programmable interconnections, multipliers, networking, memories, the delay/phase locked loops and such other cores for designing a more versatile System on Chip (SoC).

Comparison in terms of advantages and disadvantages of implementation

Table-1. Advantages and disadvantages of method of implementation.

Reference		Method used	Advantages	Disadvantages
RFID	**[3]**	**Smart Cabinet is built with antenna mounted at the bottom or the back of the shelf.**	**High reading efficiency in a single shelf as the microstrip antenna is used.**	**The books that were being wrong placed at others shelves or columns were not able to be detected**
	[4]	Smart mobile cart is built with multiplexer or splitter.	High capability of blind spot reduction	Size of the mobile cart is inconvenient in between shelves.
	[5]	Rearrangement of readers in rhombus form and rectangular form.	The location of the single book and the misplaced books is able to be tracked.	Overlapping signal and blind spot coverage
	[6]	Readers and hand-held device connected to database via Wi-Fi.	Able to detect misplaced book in multiple shelves.	High error occurrence when the Wifi is down
RFID	[7]	Robot RF-Scanner is built	Overcomes the blind spot errors and enhance the tracking of books within multiple shelf	Memory storage limitation and faulty of movement orientation over long period.
RFID IoT	[8]	Android application with 3 different module implemented.	The students can check the availability of the books and execute borrow-return of books easily	Localization with a software scanner is inconvenient with large quantity of books
	[9]	Cache deployment in between end user and database	Fast in query of book data.	Misplaced book unable to detect. It is not cost effective.
	[10]	Hand-held reader Motorola MC 9090 is used.	The processing time of borrowing and returning of books decreases	Time consumption increases when the amount of book's misplaced increases
	[11]	Website with registration, reservation, returning and E-book phase.	Capable of tracing book via tracking the personnel's ID that are borrowing the book	Dependencies. The position of the books can only be tracked if the user borrow the book out of the library

Currently, the detection of misplaced book are only available in a single shelf as discussed in problem statement. The misplacement of books on multiple shelves and outside of the boundary of the shelf still unable to be overcome. In order to solve the issue of misplacement at multiple shelves, FPGA will compared the data received from server with data in 2-Port RAM. The issue regarding the misplacement of book outside the boundary of shelf but within the library was solved by using Radio Frequency Identification (RFID). Moreover, the user experiences are part of the project consideration too. With the books to be borrowed needed to be self-scanned by users at the user scanner that are equipped with RFID reader, android application was designed to automate this issue by using Internet of Thing (IoT) and FPGA.

METHODOLOGY

Mechanism of localization system

The localization system mechanized in a way that book ID detected by the RFID reader that was attached to each column of the shelf was sent to the servers which were attached to FPGA. The data from server was transmitted to FPGA using TX and being processed to give a response to server via RX. FPGA sent "w" response to server for misplacement and "o" response to server for correct placement. The received response from FPGA was transmitted to client to light up red LED for misplacement and green LED for correct placement. The response from FPGA was uploaded to database for end user to view the availability of the book, the misplacement or correct placement of the book through android application.

There were total of four servers involve due to the limitation of ESP8266 memories. Two servers (each server for each shelf) were attached to FPGA which used

to received data from clients, transmit data to FPGA to be processed and transmit the response received from FPGA to database and client. The third server was used to update the misplacement book in database. The response uploaded by the server one and server two was downloaded by server three. Server three used the data and updated the misplacement section in terms of the name of the wrongly place books, the current position of the book and the correct position of the books. Server four was used to update the user activity within library in term of temporary borrowed and returned. Users who wanted to borrow the book within the library had to scan their matric cardsthen the book. This will enable the localization system to track the book was with which users.

Builduser-shelves interface and cloud-android interface

A. Interface set-up

The localization system was categorized into front-end and back-end system. In front-end, the system was integration of three parts such as:

a) configuration of tracking in terms of user

b) configuration of localization in terms of books.

c) configuration of processing using FPGA

In the back-end system, the user data, book data, and book location were linked to the Firebase respectively. The system creates a user-friendly interface by connecting the data in Firebase with an Android Application

Front-End: Configuration of tracking in term of user

The user had to scan their ID cards before anticipating to any borrow or return activities. This was to keep track of user activities and also to track the book's last user. A RFID reader and ESP8266 WiFi Module was used to configure the user tracking.

a. Hardware Setup: ESP8266 and RFID MFRC522

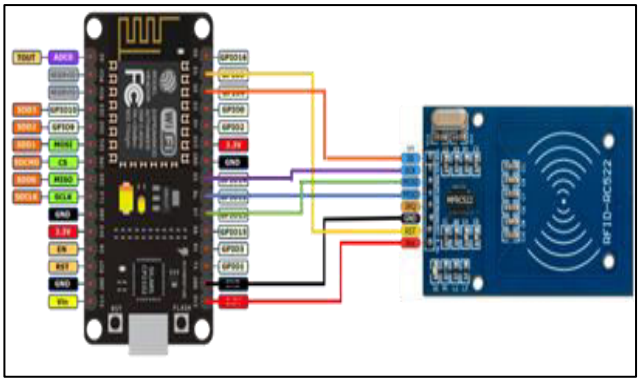

Figure-10. Wired connection of ESP8266 with MFRC522.

b. Software: logic implementation

Once the user scanned his/her ID, an "unavailable" signal was sent to Firebase when the user remove any books from the shelf. The removed books were being labeled borrowed under the user ID. The outcome of the logic was shown in result.

Front-End: configuration of tracking in term of books

There were high possibilities of the books being misplaced due the duration of returning and human's absent minded. The system was able to tell the user that the return book is being misplaced and guide the user to the correct position of the books.

a) Hardware Setup: Client ESP8266 and Server ESP8266

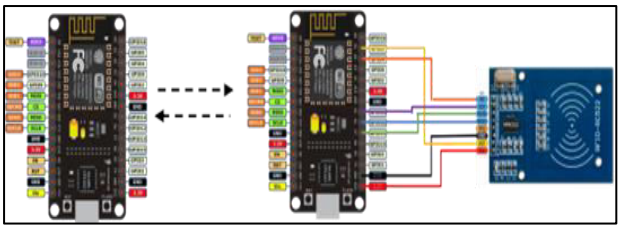

Figure-11. Client: The Connection of ESP8266 with MFRC522 (Right) Server: Wireless communication with client (Left).

Server ESP8266 was configured as access point (AP) for wireless receiving and transmitting data to and from client. The server was also configured to send the processed data to Firebase. Client ESP8266 were connected to the configure access point for receiving and transmitting data to and from server.

b) Software: Logic implementation

The RFID reader at the cell was used to detect the availability of the book. If the book is available, the book will be processed upon its location. If the book is unavailable, the status of the book in Firebase will be update.

Front-end System: Configuration of processing using FPGA

a) Hardware Setup: ESP8266 and FPGA

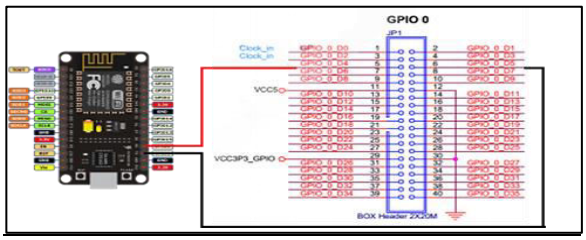

Figure-12. Client: Wired connection between ESP8266 and FPGA.

b) Software : Logic implementation

When book ID received by server, the data was then transmitted using TX to FPGA RX to be processed. In FPGA, a filter was built to filter the unnecessary command from ESP8266. Then, response was sent to ESP8266 after data processing. The output of the logic was shown in the result.

Relationship between user-shelf interface and cloud-android interface

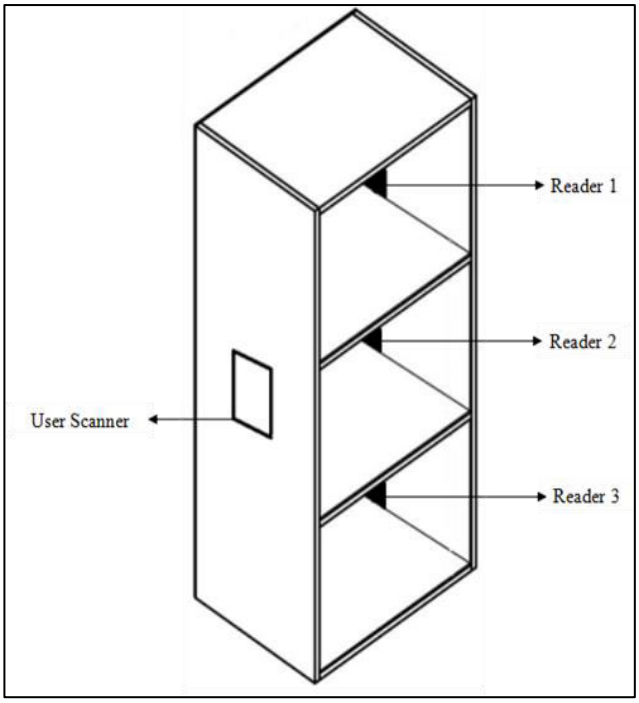

Figure-13. The position of RFID readers.

User-Shelf interface was an interface built using RFID reader and UHF passive tags. The position of UHF passive tags were placed vertically in the cover page for better readability. A RFID reader was used and placed at the front of the shelf, user scanner and at the side of each rows of the shelf shown in Figure-3.4. The user scanner was designed to verify student's and staff's ID. The user ID detection module was designed to verify the location of the books and students who borrowed and returned the books. A Wi-Fi module was established with FPGA board to connect user-shelves interface with the cloud-android interface. This was to enhance the quality of user experiences. The relationship of all interfaces was illustrated in Figure-19.

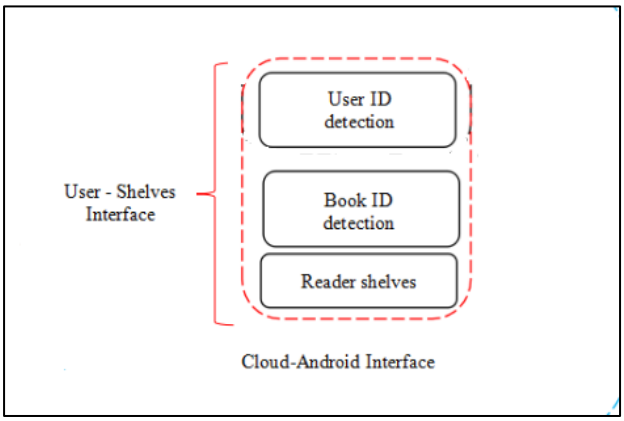

Figure-14. The user shelf interface and cloud-android interface.

Design of hardware description language (HDL), MegaCore and Qsys in Intel Quartus prime II

HDL, Mega Core and 2-Port RAM was designed to perform the mechanism of localization system within the library. The code was based on complex logic in order to minimize the cost of maintenance and maximize the security of data. Modifications of the design were done to achieve the expected result.

Implement the design using FPGA board, DE-1 Board

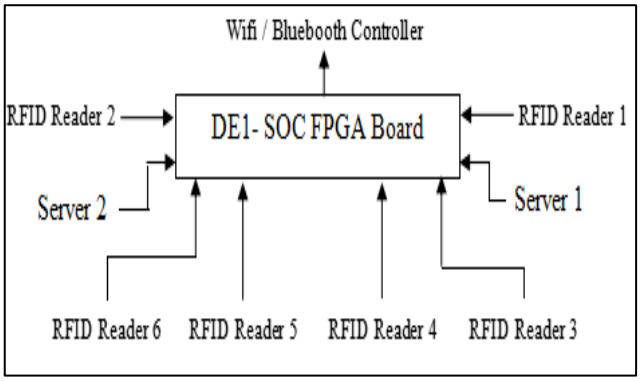

Figure-15. Design layout of FPGA system.

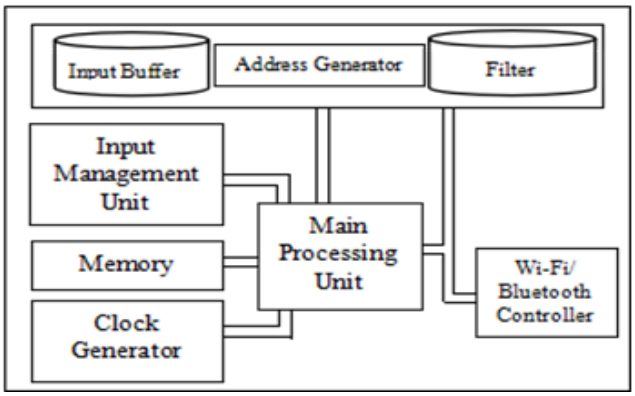

Figure-16. Layout of DE-1 SoC FPGA chip.

The activity was restricted within the library. There were two types of ID, User ID also known as matric

ID or staff ID and book ID. Idle state initiated when no ID is detected. In book ID detected condition, activity of borrow or return will be determined. In terms of borrow; the status of the book was changed from "available" to "unavailable". In terms of return, the system had to monitor the book location. Book which was correctly place will initiated the green LED to lighted up and updated the book status from "unavailable" to "available". Book which was wrongly place will initiated the red LED to lighted up and updated the book status from "unavailable" to "wrong location". Book with "wrong location" status was updated to misplacement list for admin to correct it by the end of the day.

In user ID detected condition, two registers were used, one is used to determine the user activity, borrow or return and two was used to determine the book being borrowed or returned. Both registers were initialized zero. When user ID was scanned for borrowing purpose, first register had to change from zero to one. When book ID was scanned for borrowing purpose, second register had to change from zero to one. For returning purpose, both register will changed from one to zero. The register was implemented in the RFID scanner at the front of the bookshelf. The finite state machine (FSM) of the system was illustrated in Figure-17.

The FPGA board used in this project was DE1-SoC board. The layout was illustrated in Figure-14. The DE-1 SOC board was made up of many components such as main processing unit, input management unit, clock generator, Wi-Fi/Bluetooth controller, input buffer, address generator, filter and etc. The instructions were designed using HDL, MegaCore and 2 Port-RAM and processed by main processing unit. The RFID input was managed by input management unit and this incoming information was held by input buffer. The output data was transmitted via GPIO0 [1] and GPIO1 [1] as TX. The result of the localization of the books was shown using Android Application. The FPGA was connected wirelessly to cloud and android. The layout of DE1-SoC FPGA chip was illustrated in Figure-15.

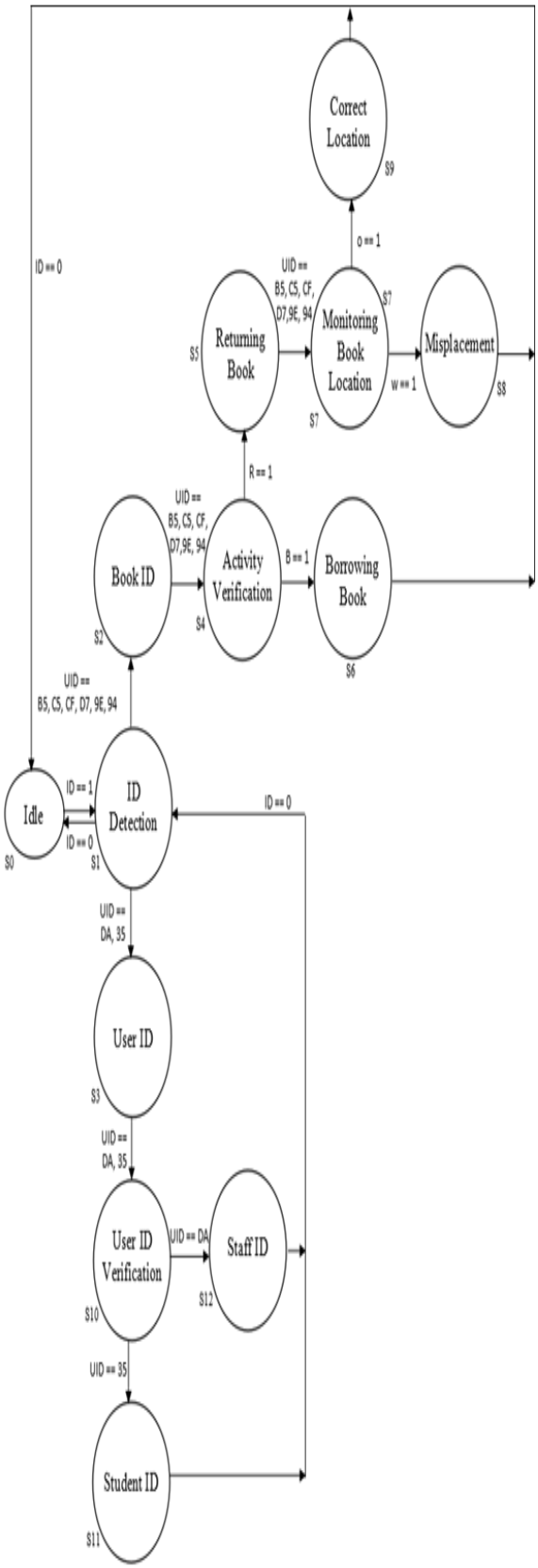

Figure-17. Finite state machine of FPGA system.

Table-2. State table.

Source state	Destination state	Condition
S0	S1	ID == 1
S1	S0	ID == 0
S1	S2	UID == B5,C5,CF,D7,9E,94
S1	S3	UID == DA,35
S2	S4	UID == B5,C5,CF,D7,9E,94
S4	S5	R == 1
S4	S6	B == 1
S5	S7	UID == B5,C5,CF,D7,9E,94
S7	S8	w == 1
S7	S9	o == 1
S3	S10	UID == DA,35
S10	S11	UID == 35
S10	S12	UID == DA
S11	S1	ID == 0
S12	S1	ID == 0
S6	S0	ID == 0
S8	S0	ID == 0
S9	S0	ID == 0

The activity was restricted within the library. There were two types of ID, User ID also known as matric ID or staff ID and book ID. Idle state initiated when no ID is detected. In book ID detected condition, activity of borrow or return will be determined. In terms of borrow; the status of the book was changed from “available” to “unavailable”. In terms of return, the system had to monitor the book location. Book which was correctly place will initiated the green LED to lighted up and updated the book status from “unavailable” to “available”. Book which was wrongly place will initiated the red LED to lighted up and updated the book status from “unavailable” to “wrong location”. Book with “wrong location” status was updated to misplacement list for admin to correct it by the end of the day.

In user ID detected condition, two registers were used, one is used to determine the user activity, borrow or return and two was used to determine the book being borrowed or returned. Both registers were initialized zero. When user ID was scanned for borrowing purpose, first register had to change from zero to one. When book ID was scanned for borrowing purpose, second register had to change from zero to one. For returning purpose, both register will changed from one to zero. The register was implemented in the RFID scanner at the front of the bookshelf.The finite state machine (FSM) of the system was illustrated in Figure-16.

The FPGA board used in this project was DE1-SoC board. The layout was illustrated in Figure-14. The DE-1 SOC board was made up of many components such as main processing unit, input management unit, clock generator, Wi-Fi/Bluetooth controller, input buffer, address generator, filter and etc. The instructions were designed using HDL, MegaCore and 2 Port-RAM and processed by main processing unit. The RFID input was managed by input management unit and this incoming information was held by input buffer. The output data was transmitted via GPIO0 [1] and GPIO1 [1] as TX. The result of the localization of the books was shown using Android Application. The FPGA was connected wirelessly to cloud and android. The layout of DE1-SoC FPGA chip was illustrated in Figure-15.

Design of cloud and Android application in smart phones

The cloud (Firebase) was designed to function as a database. This database had the details such as location and status of the books. FPGA was used for ID verification and also localization of the books with immediate updated to the cloud and android application. Modifications were carried out to achieve expected result during implementation.

Implementation of cloud and Android based on the designed FPGA system

The staff and student had to create an account in the Android application. The user status in the Android application displayed the name and the matric ID of the users. In the Android application, staff account had the accessed of authorization upon adding a new book, removing a new book, checking the availability and misplaced book and update user profile. While in student account, student had the accessed of authorization to update their profile and check for availability or misplaced book in the shelf.

RESULT

Testing phase

a) Data collection in client

The component of RFID and ESP8266 was connected as shown in Figure-18 the code was configured in ESP8266 and tested upon ID detection. Tags were scanned at RFID reader and printed in serial monitor if the code was correctly configured. Figure-19 showed the configured code being tested and obtained satisfactory level.

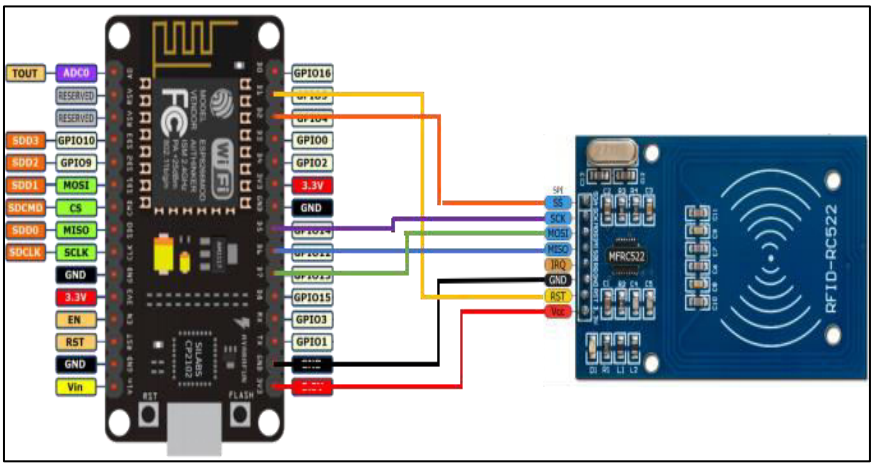

Figure-18. Wired connection of ESP8266 with MFRC522.

```
if( ! mfrc522.PICC_IsNewCardPresent()){
  Unavailable();
  delay(50);
  return;
}
if ( !mfrc522.PICC_ReadCardSerial()){
  delay(50);
  return;
}
  //Show UID on serial monitor
  String content1= "";
  for (byte i = 0; i < mfrc522.uid.size; i++)
  {
    content1.concat(String(mfrc522.uid.uidByte[i] < 0x10 ? " 0" : " "));
    content1.concat(String(mfrc522.uid.uidByte[i], HEX));
  }

  content1.toUpperCase();
  Serial.println("UID : "+ content1);
```

Figure-19. Code configuration of in client.

b) Data Transmission in terms of Client - Server

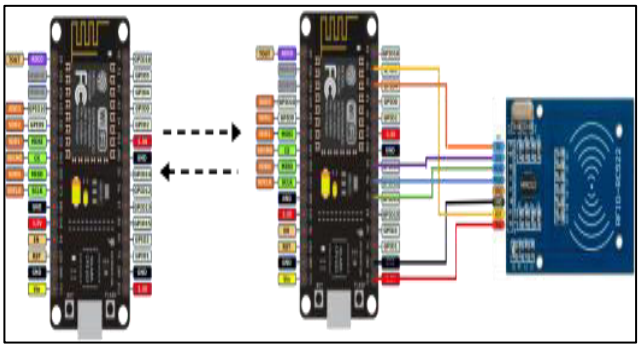

Figure-20. Client: Wired connection of ESP8266 with MFRC522.

```
const char *ssid = "Hi";
WiFiServer server(80);

void setup() {

  Serial.begin(115200);
  delay(10);
  Serial.print("Configuring access point...");
  WiFi.mode(WIFI_AP_STA);
  boolean result = WiFi.softAP(ssid);

  if(result == true) Serial.println("Ready");
  else  Serial.println("Failed!");
```

Figure-21. Set-up of access point in server.

VOL. 14, NO. 8, APRIL 2019 ISSN 1819-6608
ARPN Journal of Engineering and Applied Sciences


```
const char* ssid = "Hi";
IPAddress host(192,168,4,1);
const int httpPort = 80;
void setup() {

  Serial.begin(115200);
  delay(10);
  WiFi.mode(WIFI_STA);
  WiFi.begin(ssid);
```

Figure-22. Initiation connection by client.

```
WiFiClient client1 = server.available();  /
if(client1.connected()){

String req = client1.readStringUntil('\r');
```

Figure-23. Code configuration in server.

```
client1.connect(host, httpPort);
client1.print(content1);
```

Figure-24. Code configuration in client.

For data transmission, both client and server were communicating wirelessly through socket as shown in Figure-20. Server set-up an access point with ssid of Hi port number 80 and IP address of 192.168.4.1 as shown in Figure-21. Client initiated a connection using ssid of the access point as shown in Figure-21. Code was configured and tested in both server and client for transmission of data through socket. Figure-22 and Figure-23 were the configured code being tested and obtained satisfactory level.

c) Data transmission to FPGA

The code was tested to a satisfactory level before applying to the server. No other serial. print command was allowed in server as every print command was direct TX to FPGA. Figure-24 shown the configured and tested code for data transmission to FPGA.

```
Serial.print(req);
```

Figure-25. Code configured for data transmission to FPGA.

d) Data upload to Firebase

In order for data to be upload to database (Firebase), connection between the ESP8266 and Firebase must be initiated. The connection was initiate as shown in Figure-25. Set string and get string command were later used to upload the responses from FPGA to database.

```
#define FIREBASE_HOST "fir-app-7f566.firebaseio.com"
#define FIREBASE_AUTH "HFVCmPflbfIXe0Jp8elE0XnhWU62f0QIGGx9jDZF"
Firebase.begin(FIREBASE_HOST, FIREBASE_AUTH);
```

Figure-26. Initiation of connection to Firebase.

Result accumulation phase

a) Front-End: Result of configuration of Tracking

b) in terms of User

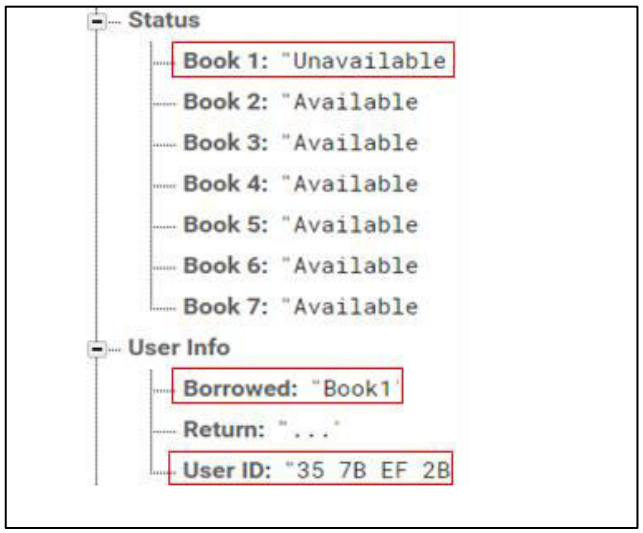

Figure-27. Information in Firebase: User ID and Book borrowed by user.

ID card scanned: 35 7B EF 2B
Unavailable book: Book 1
Borrowed: Book 1

The Firebase updated the status of book when the book in the shelf was being removed by the user. The user information of borrowed book was updated when the Book 1 was detected unavailable as shown in Figure-26.

c) Front-End: Result of Configuration of Tracking in terms of Book

Condition: Book unavailable

Client:

```
Connecting to Hi
.................
WiFi connected
IP address:
192.168.4.2
Unavailable
```

Figure-28. Successful connection between client and Access Point (AP).

Server:

```
Configuring access point...Ready
AP IP address: 192.168.4.1
Server On
..
WiFi connected
IP address:
192.168.43.5
```

Figure-29. Successful connection with Client and Internet Access.

Firebase:

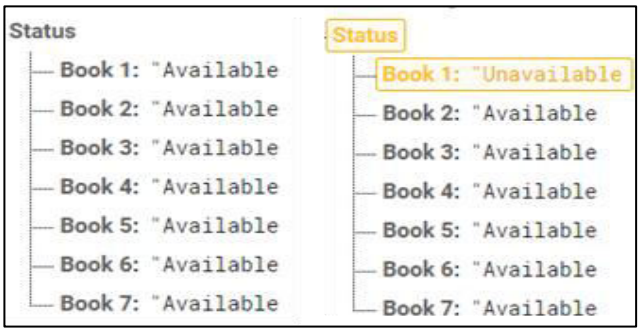

Figure-30. Update on book status.

Book 1 in Column a Shelf 1 was being removed by user. The RFID readers detected the unavailability and send the signal to Server as shown in Figure-33. The server then updates Book 1 status from available to Unavailable as shown in Figure-34.

Condition: Book available in Correct Location

Client:

```
Connecting to Hi
....................
WiFi connected
IP address:
192.168.4.2
UID :  04 B5 22 4A E6 4C 80
```

Figure-31. Book ID scanned.

Server:

```
Configuring access point...Ready
AP IP address: 192.168.4.1
Server On
......
WiFi connected
IP address:
192.168.43.5
aB5
```

Figure-32. Server received Book ID.

Firebase:

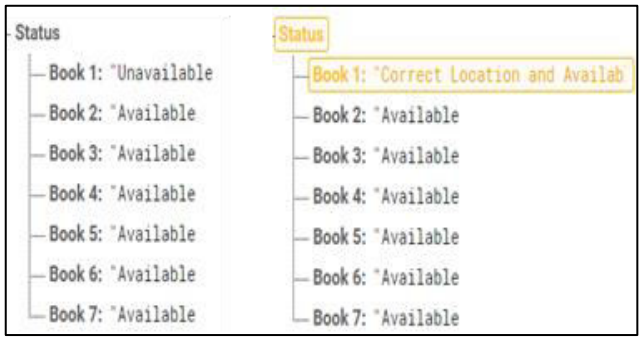

Figure-33. Updated book status in Firebase.

Notes: Difference between all the Book ID was the second column. Only the difference ID was sent to server. In Figure-35, the different ID is B5 and "B5" together with the column ID, "a" was sent to server.

The server sent "aB5" to FPGA as shown in Figure-36 and the output from FPGA was uploaded to cloud. The book was returned to the correct column and correct shelf. Therefore, the Firebase was updated from "Unavailable" to "Correct Location and Available" as shown in Figure-34.

Condition: Misplacement of books

Client:

```
Connecting to Hi
.......
WiFi connected
IP address:
192.168.4.2
UID :  04 D7 22 4A E6 4C 80
```

Figure-34. Book ID scanned.

Server:

```
Configuring access point...Ready
AP IP address: 192.168.4.1
Server On
......
WiFi connected
IP address:
192.168.43.5
aD7
```

Figure-35. Server received Book ID.

Firebase:

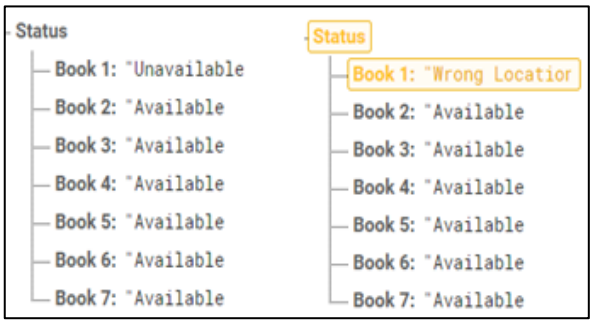

Figure-36. Updated Book Status in Firebase.

The server sent "aD7" to FPGA as shown in Figure-39 and the output from FPGA was uploaded to cloud. The book was returned to the wrong column. Therefore, the Firebase was updated from "Unavailable" to "Wrong Location" as shown in Figure-40.

Front-End: Result of configuration of processing unit using FPGA

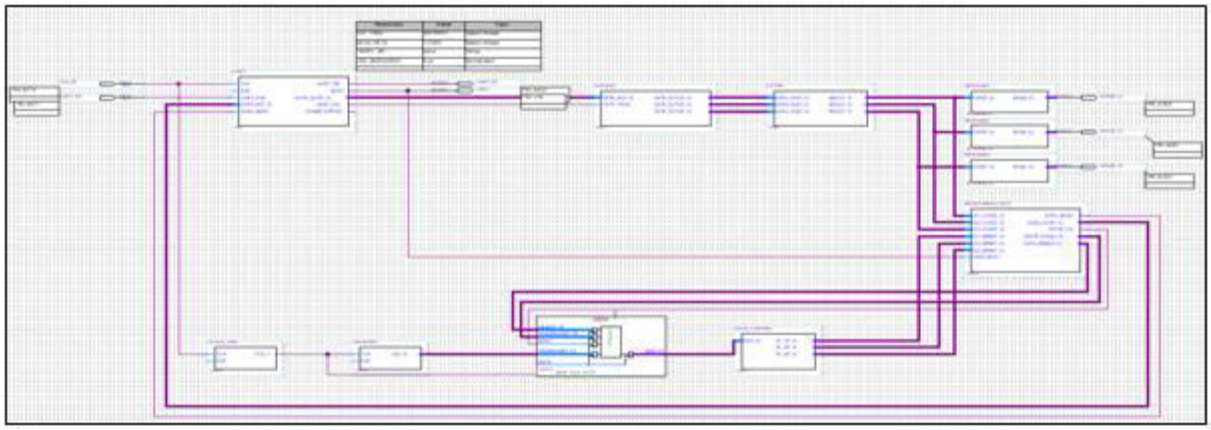

Figure-37. Single processing unit in FPGA.

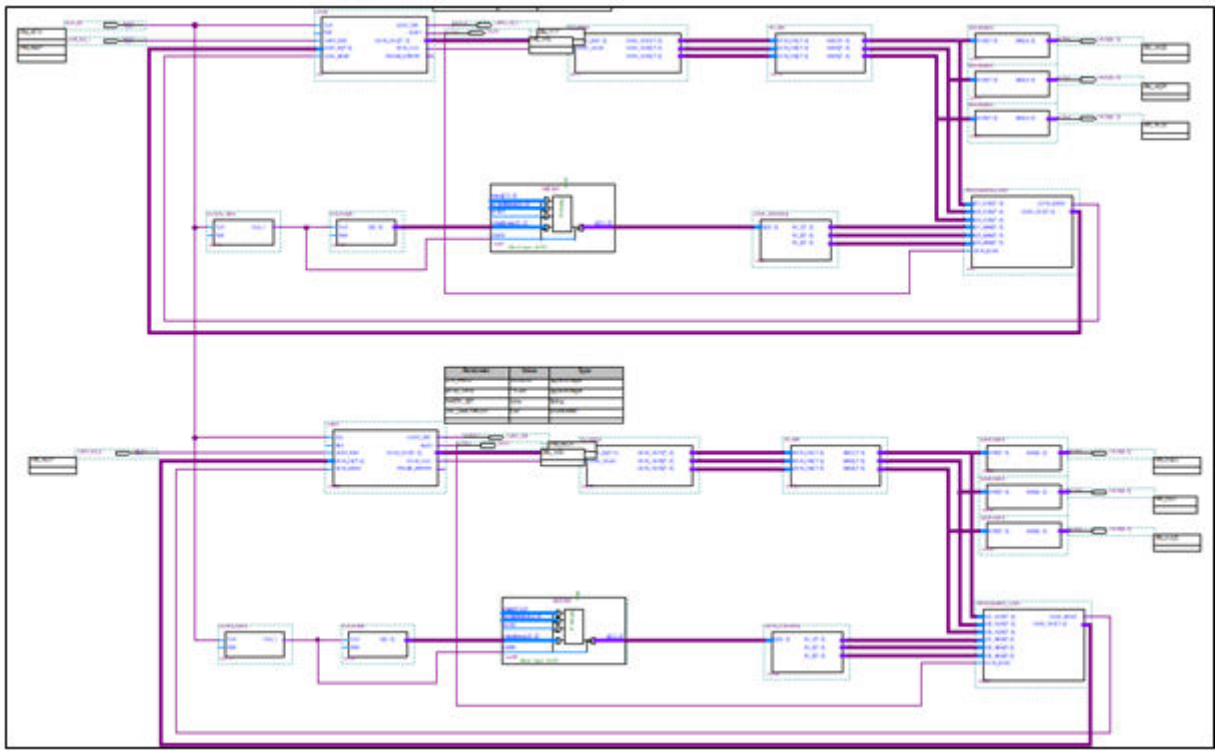

Figure-38. Multiple processing units in FPGA.

The data from ESP8266 was received by Uart block. The data was passed from Uart to RX buffer for storage until the last character of String is completely received. The data was filtered by the Filter before sending to the Processing Unit. The data in 2-Port RAM was passed to Memory Data Control to be block into 3 x 8bits output. In Processing Unit, the data received was compared with the data from memory and necessary response was passed to Uart to be TX to ESP8266 server. The system was processed as shown in Figure-39 for single processing unit and Figure-40 for multiple processing unit.

Back-End: Result of configuration of android application

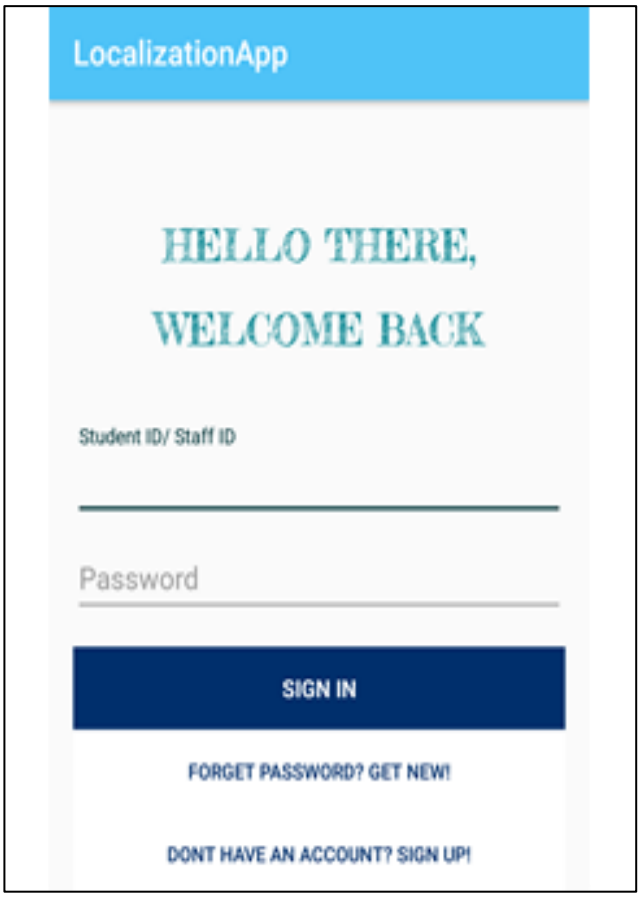

Figure-39. Login page of Android application.

The login page allowed user to login using their ID which enables them to search on the availability of the book or to locate the book location on the shelves. The login page was as shown in Figure-41.

Figure-40. Sign Up page of Android application.

The new users registered their ID via the sign up page as shown in Figure-42. Once sign up is done, the new users were able to use the search and locate service provided by this app.

Figure-41. Main page of Android application (Staff).

The registered users (student) were navigated to the main page as shown in Figure-40. In the main page, student were given a choice to search or to locate. The name, ID and the status of the user were printed on the main page.

The registered users (staff) were navigate to the main page as shown in Figure-40. In the main page, staff were given a choice to add books, remove books, check the availability or misplacement books and update profile. The name and ID of the user were printed on the main page.

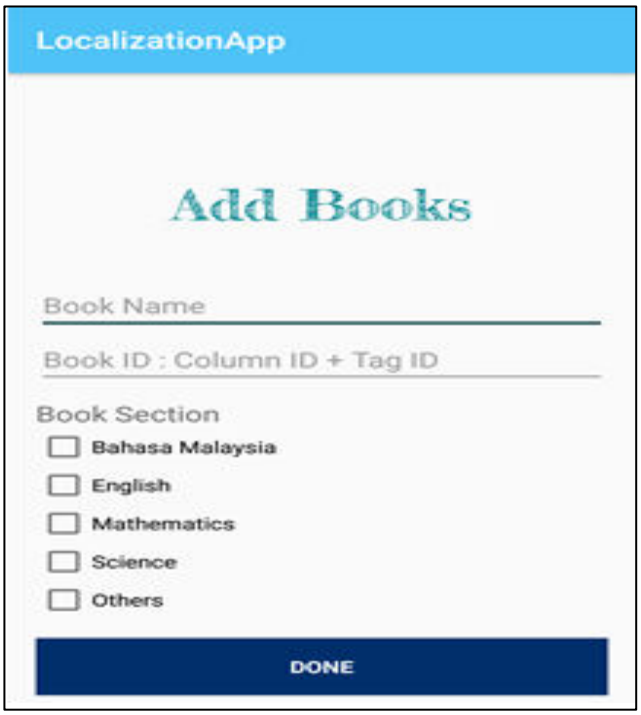

Figure-42. Add Book.

Figure-43. Remove Books.

User who are staff will be able to access add book and remove book as shown in Figure-41 and Figure-42 whereas, student are not given to the access. Both student and staff were able to access to the listing page as shown in Figure-44 to check for book availability and misplacement. Update Profile have been given the access to both student and staff to update their profile as shown in Figure-45.

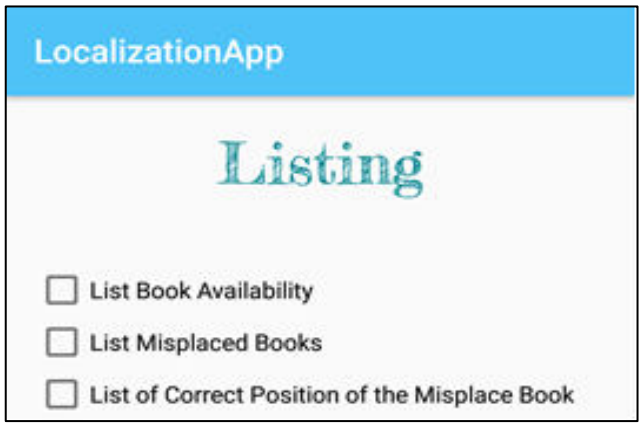

Figure-44. List of Books.

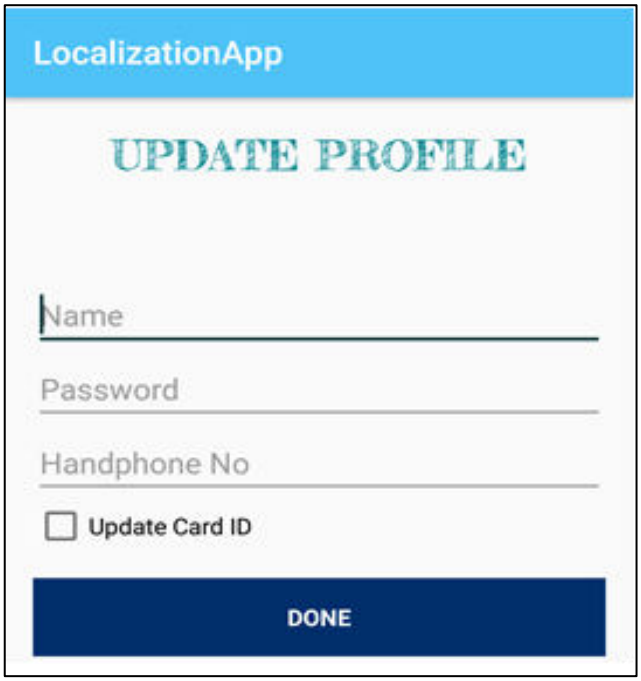

Figure-45. Update Profile.

CONCLUSIONS

A localization system is designed and implemented successfully using FPGA, ESP8266 and RFID. ESP8266 were used to enable wireless transmission and get significant information such as book ID, column ID and output responses of FPGA. Firebase connected through ESP8266 that were connected to FPGA. The users scanned their ID before any activities as to locate the book through the user location in the library. The misplacement of the books was stated in the Firebase and red indication

to inform user that book misplacement event is occurred. The correct place also stated in the Firebase and green indication to inform user about the correct location and the book is now available on the shelf. The FPGA parallelism approach led to achieve high operating frequency (1.6GHz) and optimized on chip resources logic elements such as MegaCores, FSM and 2-Port RAM

ACKNOWLEDGEMENT

The authors would like to thank the Ministry of Education Malaysia (MOE) for providing the FRGS research grant (Grant no. 9003-00474).

REFERENCES

[1] Scanlon. L. 2003. Good Vibration, Technology Review. http://www.libraryjournal.com/article/CA456770.html

[2] Dorman D. 2002. Technically Speaking: New vendors heating up Radio Frequency ID. American Libraries. 33(3): 76.

[3] Markakis, T. Samaras, A.C Polycarpou, J.N. Sahalos. 2013. An RFID-enabled Management System using Low-SAR Smart Bookshelves. Electromagnetic in Advance Application (ICEAA), 2013 International Conference, Torino, Italy, pp. 227 - 230. http://ieeexplore.ieee.org/document/6632228/

[4] Konstantions Tountas, AntonisG. Dimitriou, Aggelos Bletsas, John N. Sahalos. Mobility Improves Performances of RFID Library System, Antennas and Propagation (EuCAP), 2015 9th European Conferences, Lisbon, Portugal. http://ieeexplore.ieee.org/document/7228916/

[5] Kuen-Liang Sue, Yi-Min Lo. 2007. BLOCS: A Smart Book-Locating System Based on RFID in Libraries, Service Systems and Service Management, 2007 International Conference, Chengdu, China. http://ieeexplore.ieee.org/document/4280193/

[6] He Xu, Yifan Hu, Xu An Wang. 2016. Design and Implementation of Library Books Search and Management System using RFID Technology, Intelligent Networking and Collaborative Systems (INCoS), 2016 International Conference, Ostrawva, Czech Republic. http://ieeexplore.ieee.org/document/7695207/

[7] Jia Liu, Feng Zhu, Yanyan Wang, Xia Wang, Qingfeng Pan, Lijun Chen. 2017. RF-scanner: Shelf Scanning with Robot-assited RFID System, IEEE Conference Computer Communication 2017, Atlanta, GA, USA. http://ieeexplore.ieee.org/document/8056985/

[8] Shun-Dao Xie, Rong-Jun Chen, Hong-Zhou Tan. 2016. Design of Internet of Thing for Library Materials Management Using UHF RFID, IEEE International Conference on RFID Technology and Application,2016, Foshan, China, pp. 44-47. http://ieeexplore.ieee.org/document/7750755/

[9] Hui Li, Zhao-QuanCai. 2016. Design and Implementation of the Mobile Library App Based on Smart Phone, 2016 Internation Conference on Machine Learning and Cybernetics, Jeju, South Korea, pp. 318 -321. http://ieeexplore.ieee.org/document/7860921/

[10] A. Pravin Renold, Joshi Rani. R. 2013. An Internet Based RFID Library Management System, 2013 IEEE Conference on Information and Communication Technologies, Thuckalay, Tamil Nadu, India, pp. 932 - 936. http://ieeexplore.ieee.org/document/6558229/

[11] P. Iyappan, R. Abinaya, G. Gayathr, V, Sivapriya, V. PrasannaVenkatesan. 2014. Smart Online Library using Dynamic Access Policies - a Service Oriented Approach, 2014 IEEE International Conference on Advanced Communication Control and Computing Technologies, Ramanathapuram, India, pp. 355-359. http://ieeexplore.ieee.org/document/7019463/

[12] Xiao Yang, DaFang He, Wenyi Huang, Alexander Ororbia, Zihan Zhou, Daniel Kifer, C. Lee Giles. 2017. Smart Library: Identifying Books on Library Shelves using Supervised Deep Learning for Scene Text Reading, 2017 ACM/IEEE Joint Conference, Toronto, Canada, pp. 1-4. http://ieeexplore.ieee.org/document/7991581/

[13] M. Johnson. Parallel Computing Using FPGA. No. 7217579.

[14] Malte Vesper, Dirk Koch, Kizheppatt Vipin, SuhaibA.Fahmy. 2016. Jet Stream: An Open-Source High Performance PCI Express 3 Streaming Library for FPGA-to-Host and FPGA-to-FPGA Communication, Field Programmable Logic and Applications (FPL), 2016 26th International Conference, Lausanne, Switzerland, pp. 1-6. http://ieeexplore.ieee.org/document/7577334/

[15] Christopher Dennl, Daniel Ziner, Jurgenteich. 2012. On-the-fly Composition of FPGA-based SWL Query Accelerator Using A Partially Reconfigurable Module

Library, 2012 IEEE 20th Internation Symposium on Field Programmable Custom Computing machine, Toronto, Canada, pp. 45-52. http://ieeexplore.ieee.org/document/6239790/

[16] Anastasis C. Polycarpou, Theodoros Samaras and John N. Sahalos. 2017. An RFID-Based Library Management System Using Smart Cabinets: A Pilot Project. 2014 8th European Conference on Antennas and Propagation. Retrieved September 15, 2017, from http://ieeexplore.ieee.org/document/6902447/