VOL. 14, NO. 14, JULY 2019 ISSN 1819-6608
ARPN Journal of Engineering and Applied Sciences

www.arpnjournals.com

SIMULATION AND OPTIMIZATION OF ARTIFICIAL NEURAL NETWORK BASED AIR QUALITY ESTIMATOR

Shirish Pandey, S. Hasan Saeed and Shailendra Kumar
Department of Electronics and Communication Engineering, Integral University Lucknow (Uttar Pradesh), India
E-Mail: Shirish109@gmail.com

ABSTRACT

Electronic noses are designed to classify odors. It aims to provide remote connectivity, data storage and signal processing. In this research work, an AI technique using ANN through the use of sensor array grid system concerning air pollution monitoring of the carbon monoxide (CO) gas by integration of distributed sensors, data records and configuring ANN model is investigated. The analysis and the characterization acquired by prototype of multi-sensors electronic nose which have TGS 822, TGS 2442, TGS 813, TGS 4160, TGS 2600 sensors along with temperature, humidity and wind speed measurements sensors. Regression and MSE are taken as performance parameter to find best possible ANN model that can correlate in between sensor response and CO concentration as pollutants, evaluated by MatLab software and statistical analysis. The influence of data segment length is taken into account to improve the model. The variation in hidden layer nodes performed and compared using the variable length data then the mean square error (MSE) is calculated.

Keywords: Air Quality, ANN, Electronic Nose

1. INTRODUCTION

1.1 The electronic nose overview

The name "electronic nose" originates from an idea of the instrument and that a part of system use for smelling can also be referred as olfaction. In the latter, upon being sniffed through nasal during the testification of a product, volatile compounds reach the olfactory epithelium. electrical stimuli is produced which are transmitted to the brain due to the Togetherness of odorants with the appropriate chemosensory receptors. [1] [1, 2, 3, 4.5)]. A pattern recognition process starts along with the use of all the data in order to identify, classify the odor [5]. A single neuron reacts to several other olfactory odorants so that every single odorant is sensed by various olfactory neurons [6]. In similarly, electronic noses are based on the analysis of the inter reactivity of sensors. Therefore items with different smell show differences of its pattern. The sampling step is carried out either with a syringe, and filling it into the detector, or by taking along with a gas stream. Volatile compounds provoke the series of signals which are further processed by pattern recognition program. A different type of a system called as portable is launching in the market which has an ability to understand new patterns and connect them with new smell via training as humans do [10]. The biological sensitivity can go below the ppb levels with a change in time in the fraction of milliseconds whereas instruments hardly go below the ppb levels with a change in time in the order of seconds [11, 12].

Solid state metal oxide sensors (MOS) faces non-selectivity and it was considered a severe drawback of this technology intended as analytical tool [13, 2, 4, 6, 12, 14-19]. Brief description of commercially available sensors given in the next section.

1.2 Metal Oxide Sensor

MOS sensor possesses metal-oxide semiconducting film coated by a ceramic substrate (e.g. Alumina). The sensitivity depends on semiconductor type [15, 6, 20-22]

1.2.1 Conducting polymer (CP) sensor

CP sensors are fabricated from conducting material, fragrant or hetero aromatic (e.g. Polypyrrole, polyaniline, polythiophene), collected onto a substrate and among gold-plated electrodes [23]. Although especially fragile to polar unstable compounds, their selectivity and sensitivity may be enhanced via the usage of various functional groups, polymer structure and doping ions [24, 15]. Biomaterials including enzymes, antibodies, and cells may be incorporated into polymer systems [6, 16, 9, 25, 26, 25]

1.2.2 Thickness Shear Mode Sensor

Thick mode sensor consists of piezoelectric quartz crystal, with gold electrodes, covered with a membrane. Selectivity and sensitivity rely on the composition of coating membrane and on the running frequency. [5, 15, 28, 29, 30]. Proper calibration techniques allows to correlate data acquired with one of a kind sensors [27, 31, 33].

2. REVIEWS

Although evaluation of body liquids(blood, sputum, urine) for disease analysis and tracking is daily scientific work, human breath observations methodologies that make the most the noninvasive nature of these technique are nonetheless under-evolved. Exhaled breath turned into identified as a noninvasive tool to cure sicknesses. Breath measuring devices first seemed in 1784 whilst Lavoisier found Carbon Monoxide in the exhaled breath of guinea pigs [43]. From that time, colorimetric analysis and chromatography is used to investigate VOCs (volatile organic compounds) in human breath in portions various from mill molar to Pico molar mixture [43]. The latter fuel sensitivity restrict became done with the use of Linus Pauling's chromatography-primarily breath analysis

device in 1971 [44]. In the four hundred compounds of which the human breath included, there are only 30 identified and many of them are indicators (markers) of a couple of type of diseases [45-47]: Nitrogen Oxide which has been extensively researched as a biomarker for oxidative stress [48], exhaled Carbon Monoxide (CO) additionally a mark for cardiovascular sicknesses, diabetes, nephritis, bilirubin production. The little concentrations (ppb) of analyte molecules present the main venture, alongside the specificity to a given analyate. On the opposite hand, the benefit of growing of this generation is extremely good. This paper creates a specialty of the synthesis of a nose sensor which could test concentrations of CO gas in the environment. In the current work, a set of rules has been formed based totally on a Nano sensor and its miles described in the element. Because of the selectivity of the sensor, detection algorithms applied on standard sensor arrays data. To estimate the proportion of an analyate, the resistance of the sensor is transformed to a voltage signal.

3. METHODOLOGY - ACQUISITION AND ANALYSIS OF THE OLFACTORY SIGNAL

An e-nose is Gas Acquisition System that used an array of multiple sensors. The sensors react to gases with a version of resistance [49, 50]. In Figure 2, it is far viable to look a typical reaction of a sensor S1 (Tin Oxide) and Carbon monoxide level. After the sensor response recording the second factor issue is the pre-processing and dimensionality reduction segment. Each measure includes three principal phases: before every measure the tool inhales the analyzed gas CO, producing response of the sensors as a resistance; finally the instrument returns to the reference line, prepared for a new measure. After pre-processing, feature extraction executed using the most suitable statistics from the signal. Here few descriptors are defined from the sensors responses that are able to represent information characteristics inside the maximum efficient way. Considering that we used four sensors, each measure might be defined by 2 functions. Among all features it's been necessary to find the ones capable of maximizing the informative components and, therefore, to make contributions to improve the accuracy of the classifier. It is discovered that the most discriminative functions between the 2 training 'high' and 'low' Carbon Monoxide concentration had been the subsequent descriptors (R (t) is the curve representing the resistance version all through the size and R_{min} is the resistance at the beginning of the measure indicated as R_{base} and other is R_{max} taken as divergence.

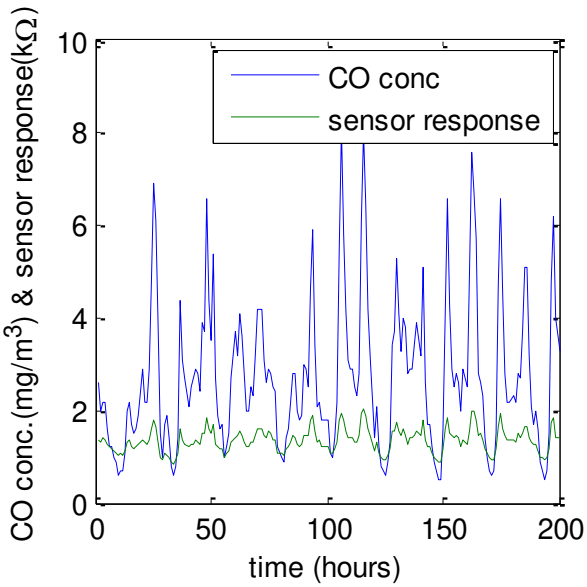

Figure-1. CO concentration and sensor response plot.

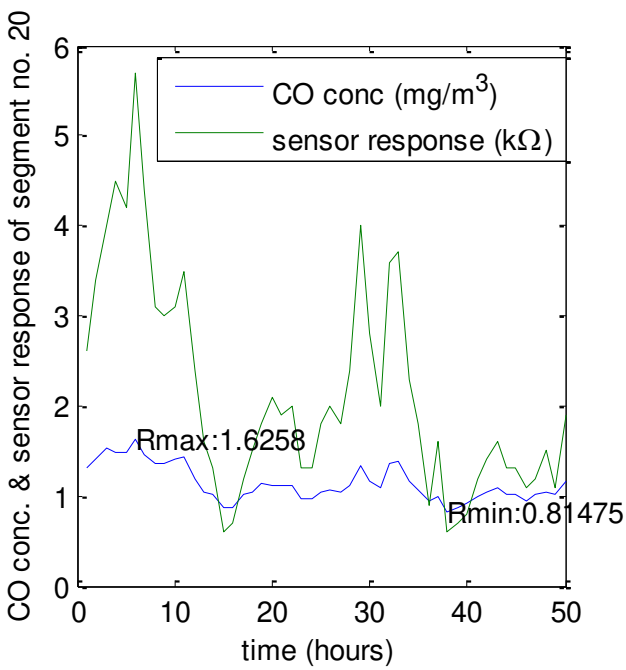

Figure-2. Sensor response at segment 1 with R_{min} and R_{max} features.

3.1 Artificial Neural Network (ANN)

ANN is a modelling tools used to find complex relationships among inputs and outputs [51]. In particular, we selected to use a feed-forward neural network with one hidden layer, wherein inputs are the bottom and divergence value of sensor resistance for a precise segment and the output is an unmarried neuron assuming the level 1 if the presence of the CO is detected and zero in any other case. Finally, we set a distinctive number of neurons within the hidden layer from 2 to 16. Since ANNs outcomes depend on the values of the initialization, we trained the network 5 times and we pick the quality

configuration. Additionally, a few variances are discovered inside the complexity of the specified data evaluation and statistics algorithms at special segment lengths; as a result, we additionally trained the phase interval of five hours.

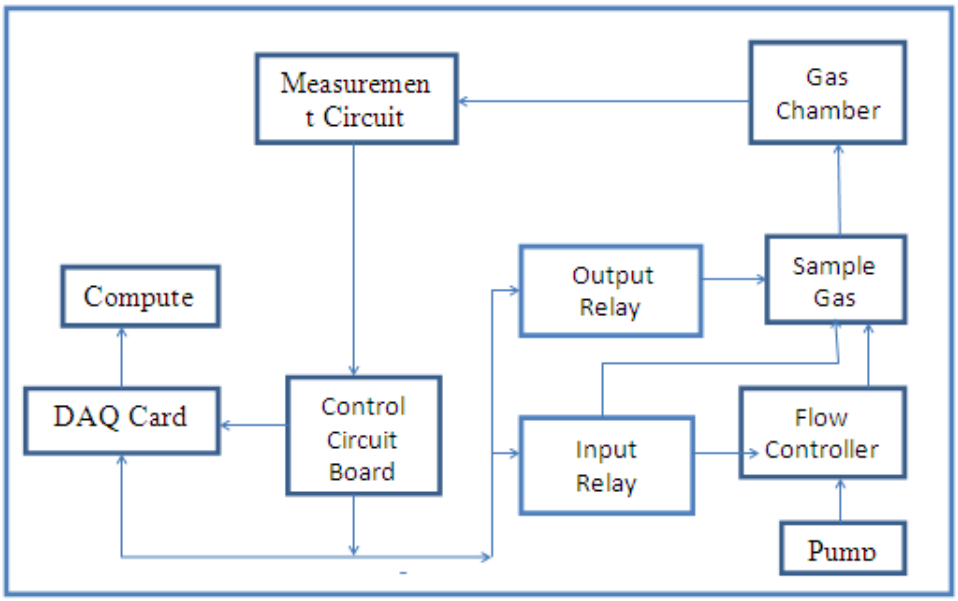

Figure-3. The schematic diagram of the E-nose system.

3.2 Data

The dataset is taken from the University of California (UCI) machine learning repository (Air exceptional records set documents). This fact is from a singular multi-sensor device developed with the aid of Pirelli Labs for pollutants monitoring. The tool turned into constructed up by a 31 cm×26 cm×12 cm metallic case web hosting the strength management unit, signal conditioning and acquisition electronics, a microcontroller board web hosting a microprocessor finally capable to run simple sensor fusion algorithms, a GSM (Global System for Mobile Communications) records transmission unit and of course a sensor array sub device. Total weight was 2.5 kg. The proposed multi-sensor device has a hosting of metal oxide chemo resistive sensors whose short characteristics are shown in Table-1. Linear correlation coefficients computed amongst analyzed species the use of on field recorded facts rNMHC-C_6H_6, 0.98, rCO-NOx, 0.78, rCO-NO_2, rC_6H_6-NOx, 0.72 rC_6H_6-NO2, 0.60, NOx-NO_2, 0.76, CO-C_6H_6,0.90 As regard as Benzene, Non-Methanic Hydrocarbon(NMHC) coefficient. Table2 documents the linear correlation coefficients computed for analyzed species [52-56]. The hidden neuron switch feature changed into the MATLAB tansig feature. Networks had been educated the usage of the resilient again-propagation set of rules [57] and early stopping as a degree to save you over-training problems [52].

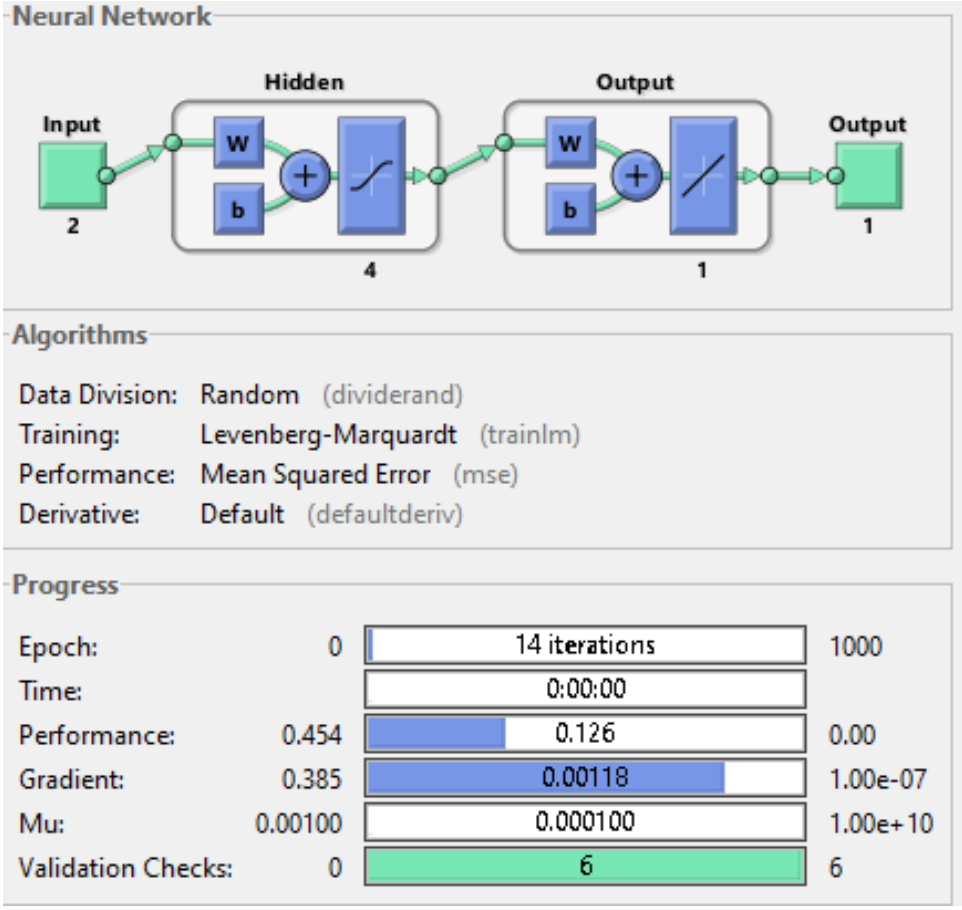

Figure-4. Neural Network Setup.

Table-1. Mean squared Error at Different Node and Segment Length.

Mean squared Error								
No. of Nodes N➔	**2**	**4**	**6**	**8**	**10**	**12**	**14**	**16**
Segment Length L:								
10	0.1379	0.1608	0.1312	0.131	0.1345	0.1404	0.1332	0.1491
15	0.1348	0.1505	0.1689	0.1585	0.1113	0.1432	0.1331	0.1288
20	0.1182	0.1734	0.123	0.1257	0.1328	0.1428	0.1608	0.1429
25	0.1461	0.1422	0.1331	0.1196	0.1438	0.1509	0.1306	0.1178
30	0.1638	0.1581	0.1325	0.1017	0.1391	0.1363	0.1643	0.1293
35	0.1345	0.1711	0.1672	0.1581	0.1713	0.1193	0.1063	0.1878
40	0.2064	0.063	0.2172	0.1274	0.1479	0.1333	0.0631	0.1816
45	0.1252	0.18	0.1143	0.0999	0.1644	0.1425	0.1498	0.1507
Minimum Value	0.1182	0.063	0.1143	0.0999	0.1113	0.1193	0.0632	0.1178

ARPN Journal of Engineering and Applied Sciences

Table-2. Regression Values for Training, Testing, Validation and All at Different Node and Segment Length.

	Table-2A. Regression Train Values								**Table-2B. Regression Test Values**							
N	**2**	**4**	**6**	**8**	**10**	**12**	**14**	**16**	**2**	**4**	**6**	**8**	**10**	**12**	**14**	**16**
L:																
10	0.7	0.71	0.7	0.7	0.69	0.7	0.69	0.68	0.67	0.696	0.67	0.68	0.7	0.72	0.76	0.75
15	0.68	0.71	0.7	0.72	0.7	0.69	0.7	0.72	0.75	0.698	0.77	0.6	0.54	0.78	0.61	0.54
20	0.68	0.65	0.67	0.71	0.67	0.67	0.69	0.73	0.75	0.809	0.66	0.65	0.66	0.7	0.7	0.44
25	0.71	0.71	0.74	0.72	0.76	0.7	0.72	0.73	0.8	0.739	0.62	0.65	0.67	0.84	0.79	0.7
30	0.7	0.67	0.72	0.58	0.64	0.7	0.69	0.71	0.65	0.773	0.55	0.83	0.82	0.71	0.66	0.62
35	0.68	0.69	0.65	0.62	0.68	0.61	0.64	0.69	0.67	0.462	0.73	0.69	0.7	0.68	0.57	0.61
40	0.66	0.67	0.72	0.73	0.71	0.72	0.64	0.68	0.78	0.55	0.75	0.54	0.75	0.75	0.7	0.64
45	0.69	0.66	0.72	0.7	0.73	0.68	0.72	0.68	0.55	0.775	0.37	0.51	0.52	0.54	0.61	0.75
Maximum value	0.71	0.71	0.74	0.73	0.76	0.72	0.72	0.73	0.8	0.809	0.77	0.83	0.82	0.84	0.79	0.75
	Table-2C. Regression Validation Values								Table-2D. Regression all Values							
N	2	4	6	8	10	12	14	16	2	4	6	8	10	12	14	16
L:																
10	0.67	0.59	0.67	0.68	0.67	0.66	0.67	0.64	0.69	0.69	0.69	0.69	0.69	0.69	0.7	0.69
15	0.67	0.64	0.56	0.61	0.74	0.65	0.66	0.7	0.68	0.694	0.69	0.69	0.69	0.69	0.68	0.69
20	0.67	0.52	0.72	0.67	0.69	0.67	0.6	0.66	0.68	0.657	0.67	0.69	0.68	0.67	0.67	0.67
25	0.63	0.66	0.68	0.72	0.66	0.67	0.7	0.73	0.72	0.707	0.71	0.71	0.73	0.72	0.72	0.72
30	0.57	0.61	0.69	0.79	0.67	0.68	0.59	0.64	0.68	0.672	0.68	0.65	0.67	0.7	0.67	0.69
35	0.65	0.56	0.58	0.61	0.57	0.72	0.77	0.58	0.68	0.64	0.65	0.63	0.66	0.64	0.65	0.66
40	0.43	0.86	0.57	0.72	0.65	0.68	0.86	0.63	0.65	0.683	0.69	0.7	0.71	0.71	0.69	0.66
45	0.73	0.58	0.72	0.77	0.58	0.7	0.62	0.66	0.68	0.657	0.67	0.68	0.67	0.64	0.69	0.69
Maximum value	0.73	0.86	0.72	0.79	0.74	0.72	0.86	0.73	0.72	0.707	0.71	0.71	0.73	0.72	0.72	0.72
N : Number of Nodes					L: Segment Length						Maximum value : Maximum Value of Regression					

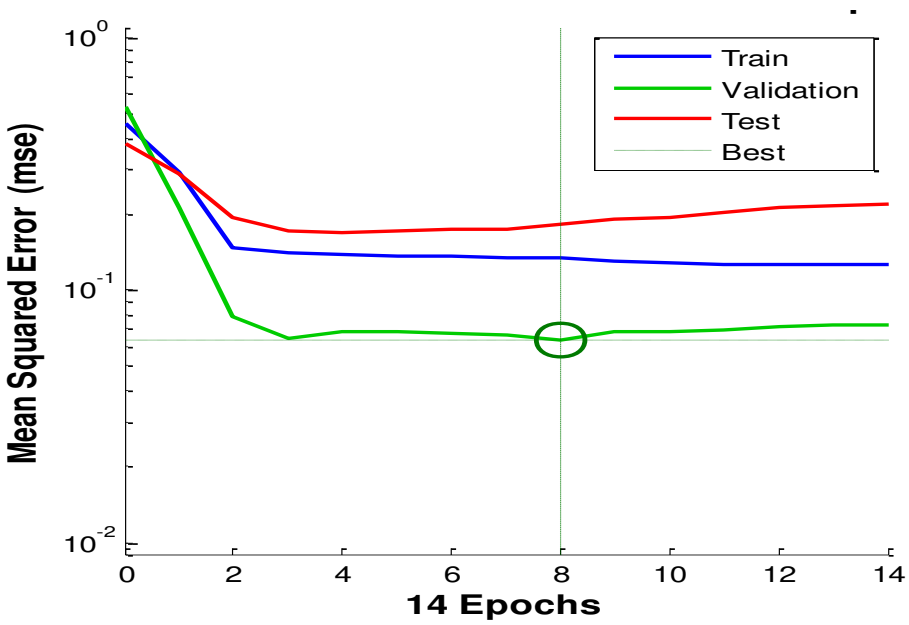

Figure-5. MSE Error Graph Best validation performance is 0.063096 at Epoch 8 (No. of iterations=14).

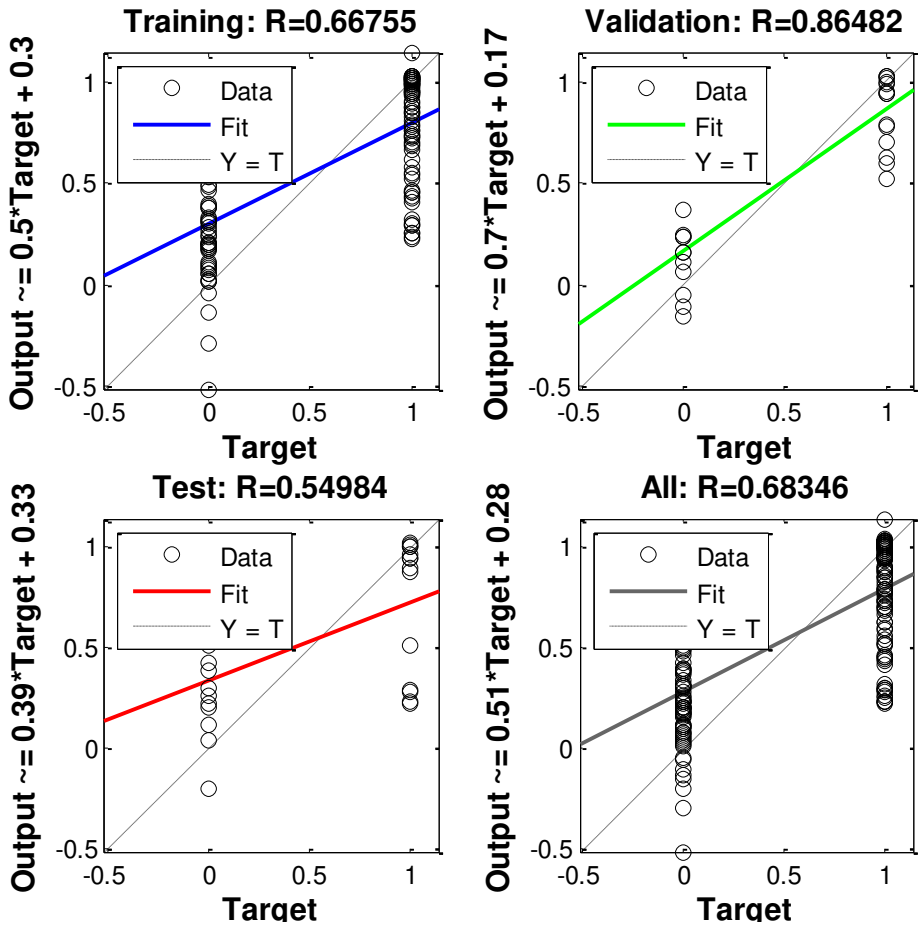

Figure-6. Regression plot for training, testing, and validation data.

4. CONCLUSIONS

This paper describes a new carbon mono oxide detection model-based approach with enhanced artificial neural network based Artificial Intelligence techniques. The aim of this work is to accurately classify the carbon mono oxide level in terms of high and low concentration.

This objective is achieved using an optimal artificial neural network model at specific data segment length and no. of nodes of the hidden layer. The Number of neurons and data segment length is varied to optimize the artificial neural network Model. The system performance is optimized in terms of Minimum Value of Mean Squared Error and Maximum Value of Regression analysis. Results show that the artificial neural network prediction accuracy is highly dependent on the data segment length and network parameters. The accuracy of prediction is improved by systematic selection of data and network parameter with minimum no of features. Work further may be enhanced by applying Genetic Algorithm Based Optimize Search on artificial neural network Platform. It is expected that the development model is helpful in application related to the environmental hazards that include carbon mono oxide related air pollution. Hence this work can support the target of air quality required in the open area and also in the buildings such as hospitals, hotels, and industries where Carbon Monoxide is very common due to the inadequate combustion process.

REFERENCES

[1] P. Gostelow, S.A. Parsons, R.M. Stuetz. 2001. Odour measurements for sewage treatment works. Wat. 35(3).

[2] A. T. Guentner, V. Koren, K. Chikkadi, M. Righettoni, and S. E. Pratsinis. 2016. E-nose sensing of Low-ppb formaldehyde in gas mixtures at high relative humidity for breath screening of lung cancer?, ACS Sensors. 1(5).

[3] G.H. Dodd, P.N. Bartlett, J.W. Gardner. 1992. Odours-the stimulus for an electronic nose, J.W. Gardner, P.N. Bartlett (Eds.), Sensors and Sensory Systems for an Electronic Nose, Kluwer Academi Publishers, Netherlands. Vol. 212, Copyright.

[4] P.E. Keller, K.L. Priddy. 1999. Physiologically inspired pattern recognition for electronic noses, in: P.E. Keller, D.B. Fogel, J.C. Bezdek (Eds.), Proceedings of SPIE on the Applications and Science of Computational Intelligence II. 3722(13).

[5] W. Göpel. 1997. Electronic noses for gas and odor sensing in food industries: state-of-the-art and new concepts, in: R. Stute (Ed.), Food and science Wissenschaft im Dienste der Ernährung, Bestfoods, Heilbronn.

[6] K.J. Albert, N.S. Lewis, C.L. Schauer, G.A. Sotzing, S.E. Stitzel, T.P. Vaid D.R. 200. Walt, Cross-reactive chemical sensor arrays, Chem. 100(7).

[7] Yan K.; Zhang D. 2015. Improving the transferability of prediction models for electronic noses. Sens. Actuator B Chem. Vol. 220.

[8] S. Feast. 2001. Potential applications of electronic noses in cereals. Cereal Foods World. 46(4).

[9] M. Oconnell, G. Valdora, G. Peltzer, R.M. Negri. 2001. A practical approach for fish freshness determinations using a portable electronic nose, Sens. Actuators B. 80(2).

[10] B.J. Doleman, N.S. Lewis. 2001. Comparison of odor detection thresholds and odor discriminabilities of a conducting polymer composite electronic nose versus mammalian olfaction, Sens. Actuators B. Vol. 72.

[11] D. Barnett. 1999. Probabilities and possibilities: on-line sensors for food processing, in: G.A. Bell, A.J. Watson (Eds.), Tastes and Aromes, the Chemical Senses in Science and Industry, UNSW Press. 1(1999).

[12] J.E. Haugen. 2001. Electronic noses in food analysis, in: R.L. Rouseff, K.R. Cadwallader (Eds.), Headspace Analysis of Foods and Flavours: Theory and Practice, Plenum Press, New York. 1(2001).

[13] I. Lundström, C. Svensson, A. Spetz, H. Sundgren, F. Winquist. 1993. From hydrogen sensors to olfactory images -20 years with catalytic field-effectdevices, Sens. Actuators. 1(1993).

[14] N.A. Rakow, K.S. Suslick. 2000. A colorimetric sensor array for odour visualization, Nature. 406(2000).

[15] D.J. Strike, M.G.H. Meijerink, M. Koudelka-Hep. 1999. Electronic noses - a mini-review, Fresenius J. Anal. Chem. 364(6).

[16] B.J. Doleman, M.C. Lonergan, E.J. Severin, T.P. Vaid, N.S. Lewis. 1998. Quantitative study of the resolving power of arrays of carbon black polymer composites in various vaporsensing tasks, Anal. Chem. 70(5).

[17] E. Schaller, J.O. Bosset, F. Escher. 1998. Electronic noses and their application to food: a review, Lebensm. Wiss. U. Technol. 31(4).

[18] J. Mitrovics, H. Ulmer, U. Weimar, W. Göpel. 1997. Electronic Noses: State-of-the-Art and Implications for the Coffee Industries, ASIC. 17(1997).

[19] D. Kohl. 2001. Function and applications of gas sensors, J. Phys. D: Appl. Phys. 34(19).

[20] E. Schaller, J.O. BOsset, F. Escher. 2000. Instability of conducting polymer sensors in an electronic nose system. Analysis. 28(3).

[21] E. Schaller, J.O. Bosset, F. Escher. 1999. Practical experience with electronic nose systems for monitoring the quality of dairy products, Chimia. 53(3).

[22] E. Schaller. 2000. Applications and limits of electronic noses in the evaluation of dairy products, Dissertation ETH No. 13676, Swiss Federal Institute of Technology (ETH), Zurich. 1(2000).

[23] P.I. Neaves, J.V. Hatfield. 1992. A new generation of integrated electronic noses, Sens. Actuators. 27(5).

[24] J.W. Gardner, P.N. Bartlett (Eds.). 1992. Sensors and sensory systems for an electronic nose, Kluwer Academic Publishers, Netherlands. 1(1992).

[25] J.R. Stetter, S. Strathmann, C. McEntegart, M. Decastro, W.R. Penrose. 2000. New sensor arrays and sampling systems for a modular electronic nose, Sens. Actuators. 69(3).

[26] T. Rechenbach, U. Schramm, P. Boeker, G. Horner, C.E.O. Roesky, J. Trepte, S. Winter, R. Pollex, J. Bargon, E. Weber, P. Schulze Lammers. 1999. A humidity-independent ammonia sensor based on a quartz microbalance: a test under agricultural conditions, Sens. Actuators. 2(1999).

[27] W.J. Harper. 2001. The strengths and weaknesses of the electronic nose, in: R.L. Rouseff, K.R. Cadwallader (Eds.), Headspace Analysis of Foods and Flavours: Theory and Practice, Plenum Press, New York. 1(2001).

[28] M. Thompson, D.C. Stone. 1992. Molecular modelling and the selective sensor response, Academic Publishers, Netherlands. 212(1992).

[29] O. Ramström, K. Skudar, J. Haines, P. Patel, O. Brüggemann. 2001. Food analyses using molecularly imprinted polymers, J. Agric. Food Chem. 49(5).

[30] M. Albrecht, M. Schlupp, J. Bargon, G. van Koten. 2001. Detection of ppm quantities of gaseous SO2 by organoplatinum dendritic sites immobilised on a quartz microbalance, Chem. Comm. 18(2001).

[31] R.M. Stuetz, J. Nicolas. 2001. Sensor arrays: an inspired idea or an objective measurement of environmental odours? Water Sci. Technol. 44(9).

[32] L. Pillonel, J.O. Bosset, R. Tabacchi. 2002. Data transferability between two MS-based electronic noses using processed cheeses and evaporated milk as reference materials, Eur. Food Res. Technol. 214(2).

[33] B. Dittmann, S. Nitz, G. Horner. 1998. A new chemical sensor on a mass spectrometric basis, Adv. Food Sci. (CTML). 20(3).

[34] K.L. Goodner, J.G. Dreher, R.L. Rouseff. 2001. The dangers of creating false classifications due to noise in electronic nose and similar multivariate analyses. Sens. Actuators. 80(4).

[35] T. Tsung Tan, V.O. Schmitt, O. Lucas, S. Isz. 2001. Electronic Noses and Electronic Tongues, LabPlus International, September/October. 1(2001).

[36] I.K. Wijeatne, W. Bijker. 2006. Mapping Dispersion of Urban Air Pollution with Remote Sensing, ISPRS Technical Commission II Symposium, Vienna, 12-14 July. 6(2).

[37] Josephine B. 2008. Change and Vive Subramanian Electronic Noses Sniff Success. IEEE Spectrum. 45(3).

[38] Clifford K. Ho, Alex Robinson, David R. Miller and Mary J. Davis. 2005. Overview of Sensors and Needs for Environmental Monitoring, Sensors 5, 28 February. 5(1).

[39] Denise Michele Wilson, Sean Hoyt, Hiri Janata, Karl Bookish, Louis Obando. 2001. Chemical Sensors for Portable Handheld Field Instruments. IEEE Sensors Journal. 1(4).

[40] R. Polikar, R. Shinar, V.Honavar, L.Udpa and D. Porter. 2001. Detection and Identification of Adorants Using an Electronic Nose, in Proc. IEEE ICASSP. Vol. 5.

[41] Wilfrid Bourgeois, Anne- Claude Romain, Jacques Nicolas and Richard M. Stuetz. 2003. The Use of Sensor Arrays for Environmental Monitoring Interests and Limitations. Journal of Environmental Monitoring. 5(6).

[42] Duk-Dong Lee and Dae- Sik Lee. 2001. Environmental Gas Sensors. IEEE sensors Journal. 1(3).

[43] M. Phillips. 2002. Detection of volatile organic compounds in breath, in Disease Markers in Exhaled Breath, N. Marczin, S. A. Kharitonov, M. H. Yacoub and P. J. Barnes, Eds. New York: Marcel Decker. 1(2002).

[44] V. E. Arterbery, W. A. Pryor, L. Jiang, S. S. Sehnert, W.M. Foster, R.A. Abrams, J.R. Williams, M.D. Wharam, Jr and T.H. Risby. 2004. Breath ethane generation during clinical total body irradiation as a marker of oxygen-free-radical-mediated lipid per oxidation: A case study. 1(2004).

[45] S. A. Kharitonov and P. J. Barnes. 2001. Exhaled markers of pulmonary disease: State of the art, Am. J. Respir. Cell Mol. Biol. 163(9).

[46] A.D. Smith, J.O. Cowan, S. Filsell, C.Mc Lachlan, G. Monti-Sheehan, P. Jackson and D. R. Taylor. Diagnosing asthma: Comparisons between exhaled nitric oxide measurements and conventional tests. Am. J. Respir. Cell Mol. Biol. 169(4).

[47] S. M. Studer, J. B. Orens, I. Rosas, J. A. Krishman, K. A. Cope, S. Yang, J. V. Conte, P. B. Becker, and T. H. Risby. 2001. Patterns and significance of exhaled-breath biomarkers in lung transplant recipient. J. Heart Lung Transplant. 20(11).

[48] T. H. Risby and S. S. Sehnert. 1994. Clinical application of breath biomarkers of oxidative stress status, Free Radical Biol. Med. 27(11-12). Dical Biol. Med. 17(6).

[49] P.N. Bartlettand J. W. Gardner. 1999. Electronic Noses: Principles and Applications, Oxford University Press, Oxford. 1(1999).

[50] M. Pardoand G. Sberveglieri. 2004. Electronic Olfactory Systems Based on Metal Oxide Semiconductor Sensor Arrays', MRS BULLETIN. 29(10).

[51] C.M. Bishop. 1995. Neural Networks for Pattern Recognition. Clarendon Pr. 1(1995).

[52] M. Pardo, G. Sberveglieri. 2004. Remarks on the use of multilayer perceptronsfor the analysis of chemical sensor array data. IEEE Sens. J. 4(3).

[53] N.A. Mazzeo, L.E. Venegas. 2005. Evaluation of turbulence from traffic using experimental data obtained in a street canyon. Int. J. Environ. Pollut. 25(4).

[54] B. Croxford, A. Penn, B. Hiller, and Spatial distribution of urban pollution: civilizing urban traffic, in: Proceeding of the 5th Symposium on Highway and Urban Pollution, Copenhagen. 5(1995).

[55] S.A. Khalifa, S. Maldonado-Basc´on, J.W. Gardner. 2003. Identification ofCOandNO2 using a thermally resistive microsensor and support vector machine. IEEE Proc. Sci. Meas. Technol.

[56] Pirelli Laboratories. Web Site: http://www.pirelli.com/web/group/labs/default.page.

[57] Shirish Pandey. 2016. A review on Enose and its application in medical field. 5(12).

[58] J. Giese. 2000. Electronic noses, Food Technol. 54(3).

[59] Y. Sarig. 2000. Potential applications of artificial olfactory sensing for quality evaluation of fresh produce, J. Agric. Eng. 77(3).