VOL. 14, NO. 15, AUGUST 2019 ISSN 1819-6608
ARPN Journal of Engineering and Applied Sciences

www.arpnjournals.com

A NOVEL AND FULLY SYNCHRONIZED LASER-BASED WIRELESS COMMUNICATION SYSTEM

Ayad Qays Abdulkareem[1], Isam Salah Hameed[1] and Ahmed Salah Hameed[2]
[1]Department of Electronic Engineering, University of Diyala, Diyala, Iraq
[2]Department of Computer Engineering, University of Diyala, Diyala, Iraq
E-Mail: ah_first86@yahoo.com

ABSTRACT

This paper presents a novel approach in designing and implementing a laser-based wireless channel communication system. Both the transmitter and the receiver were successfully designed and implemented practically. The transmitter side consists of the input unit represented by a PS2 keyboard, a controlling unit achieved by a PIC16F887 microcontroller and a transmitting element represented by a 620 nm wavelength laser lens device for bit pattern transmitting. On the receiver side, a light-sensor made of light dependent resistor (LDR) is used as a receiving element by which laser beam, which is adopted to be the holder of the transmitted signal or data is sensed. Also, another PIC16F887 microcontroller is used as receiver controlling unit. In order to display data transmitting and receiving, a piece of display platforms is located on both sides. By uploading a firmware program in the PIC control unit, synchronization between receiver and transmitter has been achieved and verified. Data transfer is done through serial bit by bit technique. Therefore, the synchronization code ensures that the receiver should wake up and synchronize itself as soon as sensing new received data in order to keep the data in a correct order. The proposed work proved the simplicity in design as well as the low cost value PIC16F887 microcontroller. Moreover, the results of data transferring show an exceptional accuracy with an error-free system. However, data transfer is still obligated to the line of sight condition which requires the laser element to be accurately positioned in the path of the LDR receiving element. By real life system verifications, this work offer powerful satisfactory that will be cost- effective which in returns suits certain design and product requirements with respect to both cost and security.

Keywords: communication channel, data transfer, laser system, LDR, and microcontroller.

1. INTRODUCTION

In recent decades, data transfer became vital, especially for wire-less communications, for many advantages such as; flexibility, ease of installation, easy maintenance, etc. All this led to its necessity in many applications on both the military and civil fields such as radar systems, broadcasting and television broadcasting as well as remote control [1]. With the large development in mobile and internet wireless communications, the traffic within the available frequency bands increases and the interference cannot be ignored. Therefore, laser radiation comes to be an effective solution. The laser diode is suitable for optical communication due to its ability of producing a highly directional and long-range beam that can be transmitted for long distances with less power consumption that can completely eliminate the problem of interference [2] [3].

In recent years, research on using laser beam in different applications has been widely exploited and subdued to serve human needs due to its unique properties. In 1984 and 1985, laser beams were used to establish communication technology between the earth station and outer space. For example, laser beam has been used to assign the position of outer space aircrafts by sending the laser from the ground station to be eventually detected by a special type of TV cameras located on a satellite [4] [5]. In other researches such the one of R. S. Sangeetha, et al. and T. Zhou, *et al.*, laser beam was used for sending information underwater for long distances. In such researches, it has been used a kind of long tank through which the laser beam is sent to cross tank content which was clean water. They found in their experimental results that the optical communication is made over 85m with 80Kbps as data rate [6] [7]. Besides, a number of researches have reported a study about laser-based voice transmission systems. In their researches, they focused on sending information through laser beam radiation. From an economical side, they found that the use of laser-based systems for communication is of importance where it provides low-cost and applicable systems that can take major part in multi general conversations as well as confidential data transmission [8] [9] [10].

In general, wireless communication systems consist of three main parts including a transmitting part, transmission medium and a receiving part. In the transmitting part, the information is collected, processed, and prepared to be transmitted via antenna side. The transmission medium is the free space which can be considered as a good channel to transfer radio signal with various frequencies due to its electromagnetic spectrum [11]. The receiving part represents the part in which the massage information are received, demodulated and processed for further specific purposes.

This work offers a good data transfer channel that can be used to transfer data between two locations with the ability of applying any desired coding technique with almost no interference with other frequency bands. A complete laser-based communication system is presented as well as a complete hardware and software of the proposed system is described.

The properties of this work are represented by different attributes. For example, the well programming of

PIC microcontroller leads to an easy and accurate implementation of complex tasks such synchronization between each part in the entire system. Besides, the use of PS2 keyboard as an input unit instead of fabricating a complex and costly integrated board (with its required buttons, memory, processor and input/output ports) contributes mainly in reduction of system complexity and implementation cost. It is worth mentioning that the use of LDR as sensor for detecting laser beam is another good property of the current work due to its low cost and high accuracy.

The organization of this paper is as follows: in section 2, the transmitter design is discussed. In section 3, the design of the receiver side is discussed as well as system software (firm-ware). Section 4 describes the aggregation of system parts, applied tests, and results discussion. Finally, section 5 presents the main conclusion and future of the work.

2. THE PROPOSED WIRELESS SYSTEM DESIGN

The proposed wireless system design is divided into two main sections represented by the transmitter side and the receiver side.

2.1 TRANSMITTER SIDE

Generally, the function of the transmitting side is summarized by acquiring the required information to be transmitted from the input unit as well as applying the necessary and desired processing to prepare information for transmission. Figure-1 shows a general block diagram of the transmitting station.

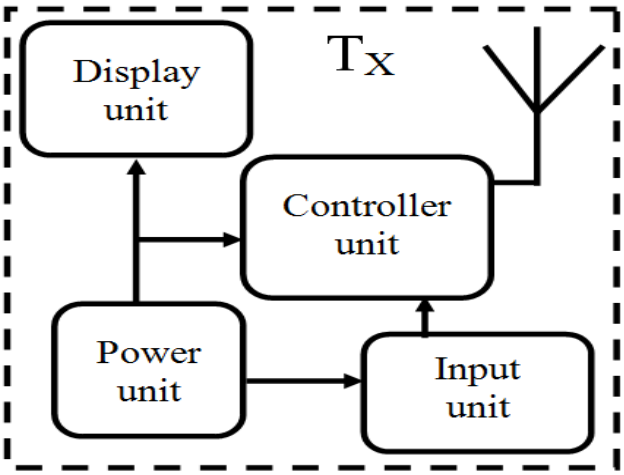

Figure-1. Block diagram of the proposed transmitting station.

2.1.1 Input unit

The input unit was chosen to be a personal computer keyboard unit. The keyboard decodes each latter or symbol according to the ASCII code. The coded symbols are then transmitted to the connected machine using a master-slave protocol by which two signals are sent. The first one is considered as clock signal and the second one is considered as the data signal. Physically, it is well known that the hardware interface of the keyboard is called PS2 port interface which is shown in Figure-2. PS2 port is a special type of interface that contains six female slots. Table-1 explains the function of each pin [12].

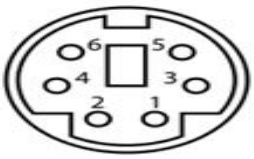

Figure-2. PS2 Female connector schematic diagram "Front View" [12].

Table-1. PS2 Keyboard Female Pins Description.

Pin Number	Purpose
1	Data
2	Not Used
3	GND
4	VCC
5	Clock

2.1.2 Controller unit

Basically, three main functions are performed in the controller unit of the transmitting part. The first function is to receive and store the digital code of the character sent from the PS2 keyboard. The second function is to recognize and display the received character on two display units. Finally, the third function controls a laser lens in a specific way that fits the character bit pattern received from the keyboard. The PIC microcontroller used in this work is of type PIC16F887 and its PIN diagram shown in Figure-3 below.

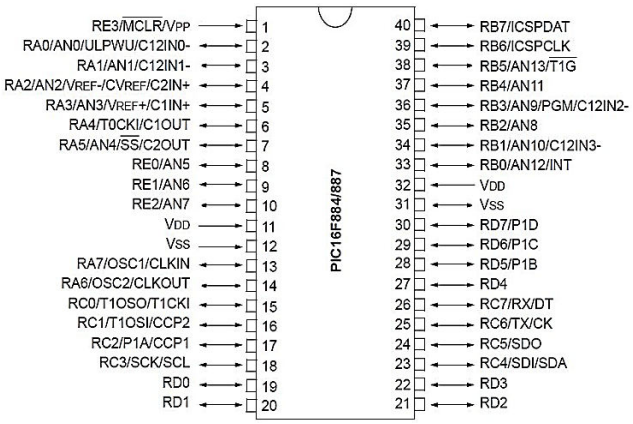

Figure-3. Pin diagram of the PIC16F887 [13].

The PIC16F887 microcontroller is set to be the core of the controlling unit. This controller has the features of being low cost and low-power consumption as well as its availability in commercial markets [13].

Physically and within the first function of the controller unit in the transmitting part, a PIC16F887

microcontroller digital pin RC1 (number 16) is configured to be the input port and it is specifically used to receive the clock signal as its input. The digital pin RC0 (number 15) is also configured to receive the data signal as its input. Both pins are connected with a pull down resistor. Meanwhile, an algorithm is developed to handle the data bit pattern that would be sent by the keyboard via the PS2 interface of Figure-2. This algorithm is developed using interrupt request (IRQ) programming technique which is supported by the architecture of the proposed PIC microcontroller. Whenever the state of RC1 (represented by the voltage across it) transits form high to low state, the interrupt request (IRQ) technique is activated and starts reading and storing the status of RC0 pin whether its low (logic zero) or high (logic one) which in turns represents an instantaneous received bit. According to this procedure, the controller will have the ability to keep tracking up the PS2 next coming data bit stream. The tracking process is carefully programmed to make data loss avoidable with a completely error-free which ends up successfully with a complete bit pattern storing process.

In the second function, an ASCII code equivalent lookup table was prepared within the developed algorithm. This part of the algorithm is written to compare the contents of the ASCII code lookup table with the content of the received bit pattern in order to figure out which character, number or symbol would be received from the keyboard (as the input unit). After recognizing the received data equivalent, the controller is programmed to display it on the display units using two methods. In the first method, RD0 to RD7 microcontroller pins are connected to a light Emitting Diode (LED) vector which is in turns used to display the received binary equivalent bit patterns. For example, if 'O' character is read and received, '1001111' bit pattern will be displayed on LED vector. On the other hand, the second method uses a 2x16 Liquid Crystal Display (LCD) screen which is interfaced with the PIC16F887 microcontroller through the use of RB0 to RB5 pins to display the character number or Symbol as an entity. For instance, if 'O' character is read and received, the character itself will be displayed on the LCD screen.
Finally, the third function is performed as follows: the PIC16F887 microcontroller digital pin RB7 is set to be an output port and it is interfaced to the antenna unit. RB7 pin is configured to control the operation of the antenna unit according to the received binary equivalent bit pattern. Likewise, the algorithm is developed to control the behavior of antenna unit according to bit state. For example, when the bit state is logic one, antenna unit transmits a signal for a controllable period of time. In returns, the signal is cut off for the same desired period of time when the bit state is logic 0. However, by this way the character bit pattern is serially transferred to the receiver.

2.1.3 Antenna unit

Generally, the antenna is an important and essential part of any wireless system. The main job of the antenna is to radiate radio frequency generated by the transmitter side. Also, it does the job of detecting the transmitted waves when it is located at the receiver side. Moreover, antenna can direct the radiated energy in the desired direction depending on its shape and type. However, the choice of the appropriate antenna depends mainly on the frequency of the signal used in the transmitter and receiver [11].

In this work, the frequency package was chosen to be within a range of [430THz to 750THz]. This rang represents an electromagnetic spectrum bundle in which the transmission of RF waves comes in the form of narrow beam of energy specified by certain color and featured by its ability to reach long distances in some applications. The generation of electromagnetic signals in this range of frequencies is according to the theory of Light Amplification by Stimulated Emission of Radiation (LASER) [2]. The laser can be defined as an electromagnetic radiation that sends equal amounts of light in terms of frequency and waveform which by merging with each other they become a high-energy and highly cohesive photonic pulse. Laser light has the property of travelling for long distances without being scattered. Also, laser can travel those distance with a complete invisibility which makes it good choice for some security systems [3].

For the laser diode used in this work, the operating wavelength is of 650nm with maximum operating voltage of 5 volts and with maximum operating current of 45 mA. The laser diode radiated beam had been adopted to be the data carrier signal.

2.2 RECEIVER SIDE

The receiving part function is to receive the signal and apply the necessary processing to acquire its included information. A block diagram of the proposed receiving station is shown in Figure-4.

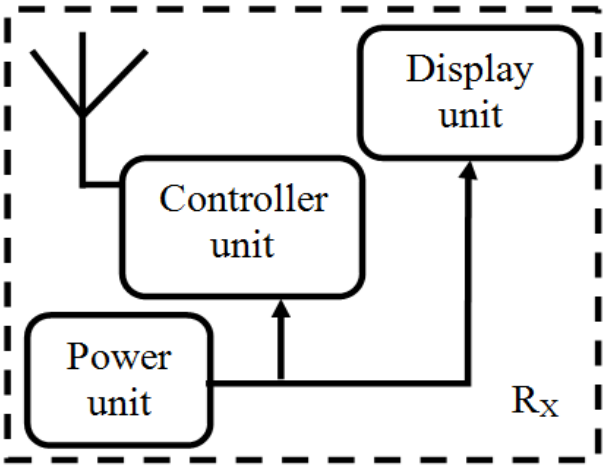

Figure-4. Block diagram of the Proposed Receiving Station.

2.2.1 Receiving antenna

In general, receiving antenna should sense the transmitted signal and convert its energy from an electromagnetic form to an electric form in order to have it for further processing by other receiver system parts. Since the transmitted signal is in the form of laser light, then it

must be sensed by a light sensor. Practically, light dependent resistor (LDR) has been used as the light sensing device. Resistor of the LDR is changed according to the amount of light that strikes its front plane. It is worth mentioning that LDR resistors are usually connected to a voltage divider circuit that mainly contributes in light sensing process in order to make the change of LDR value highly noticeable [14] [15]. With the (LDR) being firmly shielded from external light interferences, accurate light sensing can be achieved.

2.2.2 Controller unit

This part of the receiver is considered as the most important part and can be regarded as the brain of the receiver section. It has been programmed to perform two main functions. The first one is to correctly receive and store transmitted bit pattern, and the second function is to recognize the received and stored bit pattern data (whether these data are characters, numbers, or symbols) as well as to display it via a display units.

The algorithm being developed within the microcontroller has seriously taken in consideration the situation of synchronization. Compared with the algorithm of the transmitter side, which deals with the data of the PS2 keyboard that includes data and clock signals, the algorithm of the receiver side is more complicated and requires very high programming skills since there is no clock signal and only data signal are available.

The principle of the start and stop bits is applied by the transmitter to perform a reliable data transmission. In other words, when the receiver controller detects the first bit (start bit), it synchronizes itself to correctly receive and store next coming bits [17].

Physically, the receiver controller unit reads the activity of the LDR device according to the following procedure: the presence of the light is interpreted as logic 'one' while the absence of the light is interpreted as logic 'zero'. After receiving and storing the incoming data bits, an interpret operation is performed. A lookup ASCII code table that is identical to that of the transmitter is developed and prepared within the receiver controller algorithm in order to perform the interpret operation correctly. After that, the interpreted character is displayed on the display units. However, as in the transmitter circuit, an additional PIC16F887 microcontroller integrated circuit is chosen to be the controller unit in the receiver circuit of this work.

2.3 FIRMWARE OF THE WORK

The controller program (firmware) was written using the MicroC for PIC Software Integrated Development Environment (IDE) [16]. In this work, the developed firmware program is divided into two main parts. The first part is the transmitter controller firmware program and second part is the receiver controller firmware program. Details about both programming parts are explained in the next subsections.

2.3.1 Transmitter controller firmware

In this part, four main operations are performed by the developed firmware program of transmitting controller. The first operation deals with the process of making an initial check for all parts of the transmitter side including PS2 keyboard, LED Array vector, and the LCD attached to them. The second operation focuses on controller synchronization in order to ensure precise reading for each input signal of the PS2 keyboard as well as correct interpretation to such data based on a lookup table which was written and prepared within the developed algorithm to provide an ASCII code equivalent. Likewise, the third operation takes the role of displaying data on both display units. Finally, the last operation is about transferring the binary data code to the antenna unit to be transmitted to the receiver side in serial form.

2.3.2 Receiver controller firmware

Similarly, the firmware which is developed for the receiving controller side was written to perform four main operations. Firstly, an initial check to all receiver parts is done and unify it status on the LCD attached to it. Secondly, a synchronization process to receiver controller with the serial data that comes from the transmitter unit is performed to ensure correct data order storing. In other words, the receiver is programmed to automatically synchronize itself whenever the transmitter starts sending any kind of data. Thirdly, an identical to that of the transmitter unit, a lookup table was written and prepared within the developed algorithm to provide an equivalent ASCII code for correct data comparison. The last operation is about displaying these data on the screen of the LCD as well as showing their equivalent ASCII code on the implemented LED array vector.

After completing the firmware for both transmitter and receiver controllers, EasyPIC7 microcontroller programmer and trainer were used for the aim of programming the transmitter as well as the receiver microcontrollers [18]. In other words, a process of transferring the Intel hex file to the PIC microcontroller chips was performed. Besides, with the EasyPIC7 microcontroller programmer and trainer, an essential test to the programmed microcontroller can be applied.

2.4 SYSTEM AGGREGATION AND TESTS

After implementing each part of the proposed system individually, an aggregation to the whole system is made to ensure a precise and successful synchronization between each of the system elements. Moreover, this operation will unify the various energy sources which results in a compact system that would experience an increase in its efficiency. Two identical voltage regulator circuits are implemented using LM7805 voltage regulator in order to provide a steady power source for both of the transmitter and the receiver side. Figure-5, & Figure-6 shows the transmitter and the receiver parts of the proposed system, respectively.

It is worth mentioning that a test to the proposed system has been successfully applied with a completely error-free. For testing purposes many attempts were applied to the system using various input keys. The response of the implementation was very fast and as expected with no error. This makes the system

successfully built and suitable for texting channel and very wide ability in remote control applications along with its ability to provide signal communication for general and confidential information.

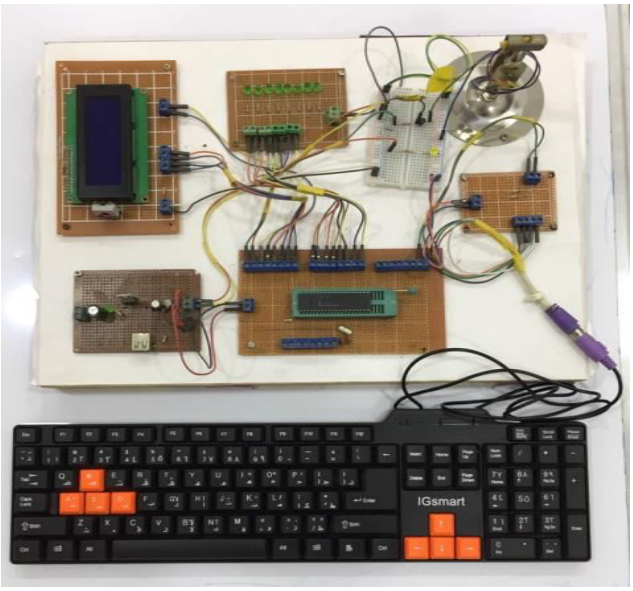

Figure-5. Transmitter Part of the implemented system.

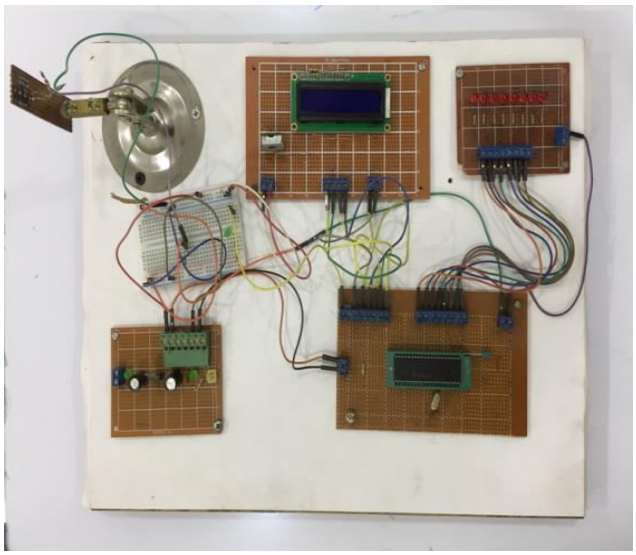

Figure-6. Receiver Part of the Implemented System.

3. CONCLUSIONS

In this work, a novel and fully synchronized laser-based wireless communication system was implemented and designed. It has been found that laser beam can be used to convey data wirelessly. Not only this, but also laser beam can be regarded as a low-cost and accurate data transmission technique compared to other RF communication techniques. Upon the final aggregation of the system and with the aid of two display units, data transmission checking was practically achieved with a complete error-free. Visualizing data transfer was experimentally made by using LED vector for binary equivalent display as well as a 2x16 LCD screen for visualizing the data in its original form whether it is symbol, number or character. Base on the practical results, it was found the use of light dependent resistor LDR can be used as an optimal sensor for detecting laser beam and it can be regarded as another good property of the current work due to its low cost and high accuracy.

From the research that has been carried out, it is possible to conclude that with good programming ability, the PIC microcontroller can be configured to perform complex tasks such as synchronization instead of being limited to simple on/off control applications. Moreover, the use of PS2 keyboard as a an input unit instead of fabricating an integrated boards, that might consist of buttons, memory, processor and input/output ports (which is going to be so costly and complicated), reduces the complexity and the cost of the whole system.

Finally, this work provides an applicable data transmission for remote areas where mobile communication towers is hard to be setup. However, it is still necessary to make the receiver and the transmitter in view of each other with a condition of line-of-sight propagation.

4. FUTURE OF THE WORK

This work can be considered as a basic platform and can be developed in the future according to some of the improvement suggestions shown below:

a) Applying an identical modifications to the lookup table in both transmitter and receiver to perform coding technique. Also, developing the serial transmission via the laser lens to apply additional encoding technique to the transmitted bit pattern, taking into account the data transmission efficiency.
b) Developing the transmitter and receiver units to handle a USB interface that will make the implemented system suitable for wide data transfer applications such as the ability to transfer a content of usb flash memory device.
c) Transmission range can be increased by using a laser device with longer distance taking into account the required consumed power.
d) Improved version of the current work can be constructed to provide confidential data transmission over mountain areas where the mobile tower is hard to be installed. For instance, transmitting confidential voice data from one hill top to another can be achieved with the keep of line of sight condition and with the use of additional amplifier circuits at the receiver side for gaining high efficiency.

REFERENCES

[1] A. Biswas and M. Chowdhury. 2017. Wireless communication : theory and applications. Cambridge: Cambridge University Press.

[2] K. Thyagarajan. 2012. Lasers : fundamentals and applications. Springer.

[3] C. R. Phipps. 2011. Laser ablation and its applications. New York; London: Springer.

[4] H. G. Sandalidis. 2011. Performance of a laser Earth-to-satellite link over turbulence and beam wander using the modulated gamma-gamma irradiance distribution. Applied Optics. 50(6): 952.

[5] T. Aruga, K. Araki, R. Hayashi, T. Iwabuchi, M. Takahashi and S. Nakamura. 1985. Earth-to-geosynchronous satellite laser beam transmission. Applied Optics. 24(1): 53.

[6] R. S. Sangeetha, R. L. Awasthi and T. Santhanakrishnan. 2016. Design and analysis of a laser communication link between an underwater body and an air platform. 2016 International Conference on Next Generation Intelligent Systems (ICNGIS), Kottayam. pp. 1-5.

[7] T. Zhou, S. Hu, L. Mi, X. Zhu and W. Chen. 2017. A long-distance underwater laser communication system with photon-counting receiver. 2017 16th International Conference on Optical Communications and Networks (ICOCN), Wuzhen. pp. 1-3.

[8] M. K. Ahmmed, A. S. Pranti, and A. M. S. Iqubal. 2013. Low Cost Voice Communication Device Design Using Ordinary Laser Torch and LDR Available in Bangladesh. International Journal of Electronics and Electrical Engineering. pp. 223-229.

[9] S. Sindhu and M. Yuvaraj. 2015. Wireless Voice Communication Device Design Using Laser Torch and LDR. International Journal of Emerging Technology in Computer Science & Electronics (IJETCSE). 16(1): 81-83.

[10] A. Begam and D. Dutta. 2017. Design of Wireless Communication System for Signal Transmission using Laser Torch. International Journal of Electronics, Electrical and Computational System. 6(11): 15-18.

[11] P. Pandey. 2012. Antenna and Wave Propagation. New Delhi: S.K. Kataria & Sons.

[12] K. C. Mansfield and J. L. Antonakos. 2010. Computer networking for LANs to WANs : hardware, software and security. Boston, Ma: Course Technology, Cengage Learning.

[13] M. Bates. 2014. Interfacing PIC microcontrollers : embedded design by interactive simulation. Amsterdam U.A.: Elsevier Newnes.

[14] D. Da Silva and D. Acosta-Avalos. 2006. Light Dependent Resistance as a Sensor in Spectroscopy Setups Using Pulsed Light and Compared with Electret Microphones. Sensors. 6(5): 514-525.

[15] Ian Robertson Sinclair and J. Dunton. 2008. Practical electronics handbook. Amsterdam Elsevier, Newnes.

[16] Lucio Di Jasio. 2012. Programming 16-bit PIC microcontrollers in C learning to fly the PIC 24. Oxford Newnes.

[17] B. A. Forouzan. 2013. Data communications and networking. New York: Macgraw-Hill.

[18] EasyPIC v7 - PIC Development Board with In-Circuit Debugger. MikroElektronika, 2019. [Online]. Available: https://www.mikroe.com/easypic. [Accessed: 29-Mar-2019].