VOL. 14, NO. 21, NOVEMBER 2019 ISSN 1819-6608
ARPN Journal of Engineering and Applied Sciences
©2006-2019 Asian Research Publishing Network (ARPN). All rights reserved.

www.arpnjournals.com

REVIEW ON ENERGY EFFICIENCY (EE) MAXIMIZING AND SPECTRAL EFFICIENCY (SE) FOR (NOMA) IN 5G NETWORKS

Haitham Al Fatli and Norshidah Katiran
Wireless and Radio Science Center (WARAS), Faculty of Electrical and Electronic Engineering, Universiti Tun Hussein Onn Malaysia
Parit Raja, Batu Pahat, Johor, Malaysia
E-Mail: haithamalfatli@gmail.com

ABSTRACT

Unlike the conventional Non-Orthogonal Multiple Access (NOMA) can agree much more users by the no orthogonal available source allocation the maximizing energy efficiency (EE) and spectral efficiency (SE) in Massive multi-input–multi-output systems (MIMO) are the most critical to get higher spectrum efficiency and battery-saving technology to diverse use high data traffic in next-fifth generation (5G). We first must understand the idea of this system of NOMA to use in radio access in the future for 5G technology. Whereas it is necessary to achieving SE and EE without immolation of the quality of service (QoS) on mobile devices. The Performance of ES and EE can achieve when all antennas available are using. Then we furnish with the basis for both downlink and uplink, also explain how the network can use the best capacity. Also, we research of effect incomplete the receivers in doing on the NOMA networks.

At last, our research of SE on the networks that use with the relations to EE. We explain the networks with NOMA better than MA expression, in the total capacity, the maximizing EE and SE. This study aims to discuss how we can to get the obtain a high SE and maximizing EE. With reducing the power consumed and to achieve a better data rate when increasing the number of the antennas when NOMA in the case of downlink when used a massive MIMO system.

Keywords: OFDMA, EE, SE, SIC, NOMA, OMA, power allocation.

1. INTRODUCTION

When we go back to the history of wireless communications, according to the sequence from the first generation (1G) to the fourth generation, (4G). The multiple access schemes (MAS) are the leading technology to classify different wireless communication systems. Which it is known as in 1G as frequency division multiple access (FDMA). Also known in the second generation (2G) as Time-division multiple access (TDMA) in the thread generator (3G) is known as Code-Division Multiple Access (CDMA) and Orthogonal frequency-division multiple access (OFDMA) is known for the 4G, all these technologies are part of the orthogonal multiple access system (OMA). In these conventional technologies, MAS is dependent on different users allocate by the orthogonal resources in the frequency, time, and code domain. To be able to avoid or reduce interference among users in the cell. In this case, can this technology achieving the logical multiplexing gain. Therefore, we can see the speedy development of the mobile Internet [1].

We explore in this paper one method of next-generation 5G with NOMA. There are three techniques in OMA. In this period, all the cellular networks are implementing these techniques, for example, TDMA technique working with time, FDMA technique working with frequency and CDMA working with code. These three techniques cannot be enough to high requests of the radio system in the future, because of the fast growth of applications for wireless network devices, and as follows. We can summarise the OMA characteristics.

In the TDMA techniques, each user has some information and this information is required accurate time synchronization to send this information with non-interference. In the FDMA application such as OFDMA, all information for any user is transferred to subcarriers by subset [2]. However, in the CDMA use the codes which it is request to separate the users on the same channel. There is some difference between the NOMA approach and the MAS approach. NOMA is providing the orthogonal access in the three dimensions of the time, frequency and code of the user. [3, 4]

In the NOMA, all the users are operating at the same time and in the same bandwidth, which is exceptional by the power levels. At the transmitter side using superposition coding (SC). However, in the receiver, side using the successive interference cancellation (SIC) in downlink channels and also in uplink channels in NOMA system. NOMA will be an essential proposal in the future to use in the radio access 5G network to increase the capacity of users. Therefore the NOMA technique is the better solution for beam space MIMO problems. Which it supports only one user at the same time-frequency resources and the number of RF it cannot be substantial because of the degree of freedom (DOF). The RF must be more significant than or equal to DOF required by users. Practically NOMA requires high power for implementing power allocation in real-time and also implementing SIC algorithms.

In 2022 is expected to deploy the 5G networks and also computation capacity of access points and handsets to be higher to work in the algorithms NOMA. We present in this paper, the basis of NOMA technology with and capacity limits of radio access in the future. There are some advantages of NOMA; for example, we can see the low transmission latency, a decrease in the signalling cost and also massive connectivity. The rest of this paper is sorted out like the following. In section 2, the concept of NOMA in MIMO system and also the NOMA downlink and uplink technology in the BS. Section 3 presents NOMA with the SIC in two cases perfect and

©2006-2019 Asian Research Publishing Network (ARPN). All rights reserved.

imperfect. Besides, in Section 4, we are describing a millimetre wave in NOMA. In Section 5, we discuss the challenge NOMA- massive NOMA [1].

2. THE CONCEPT OF NOMA IN MIMO SYSTEM

NOMA has attracted considerable attention recently consequent to its superior SE [5]. Specifically, NOMA using SC at the transmitter side and using SIC at the receiver side. Furthermore, there is an inverse relationship between transmitted power allocated for any user and channel gains. By this method, the user can achieve better channel gains and also can treat the interference from its double. However, its interference to the double remains relatively small. Consequently, a better balance between the sum rate and fairness can achieve by using NOMA.OMA scheme, which has referred compared with conventional orthogonal multiple access which was located more power for all users to increase the sum-rate under better channel conditions [6].

We consider in this paper OFDM as modulation shame and NOMA multiple schemes. Buy used NOMA can each user in the system using all the subcarrier signal. Figure-1 shows two user's spectrum sharing in one frequency NOMA and OFDMA, which applies to use in both downlink and uplink system.

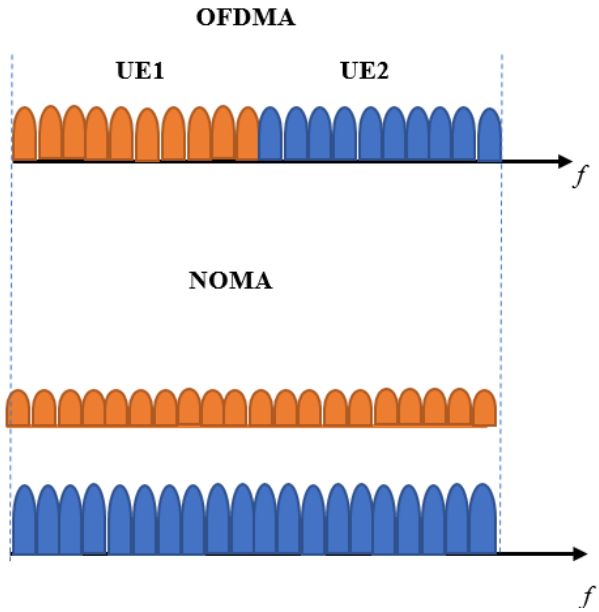

Figure-1. Sharing the signal in two users for OFDMA and NOMA. (Refik C. K. *et al.,* 2016)

That which is used at transmitter side SC and at receiver side SIC and that possible to use all the user in the same spectrum. Also, all the personal information signals can superimpose on the single waveform. However, on another side, means the receiver side using SIC has decoded signals till discovery the required signal. In Figure-2 we have three information signals specific in three different colours, these signals are superimposed on the transmitter side and used SIC in the receiver side. The strongest signal its decoding first signal. Then by using the SIC receiver, which has its strongest power signal. Moreover, the second and third signal is the interference signal which they have low power which can superimpose after the decoder strongest signal. When the decoder is perfect, in this case, the decoded signal subtracted from the received signal by SIC and repeat this process until finding the desired signal.

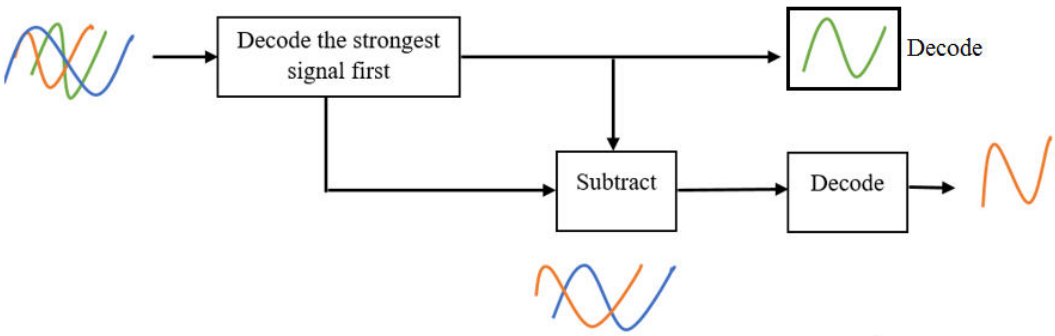

Figure-2. Decode the signal by (SIC)
(Mansi G., *et al*. 2016)

In the SIC method is depended on cancellation a complete signal by a repeat process step. The power-split carefully by the sender among the user information of the waveforms and then superimpose them. In the downlink and the uplink channel, the methodology of power split is different.

©2006-2019 Asian Research Publishing Network (ARPN). All rights reserved.

3. ADVANTAGES OF NOMA VS AOM

Some advantages differentiate NOMA and conventional OMA in different aspects. Because NOMA is serving multiple users in the same cluster and the same time and also in the same resource of frequency that leads to reducing the interference between the users by use SIC technology. NOMA can increase the number of users at the same time and the same frequency under this reason NOMA can support several massive connectivities. Users do not need to use the scheduled time to transmit the information because of the nature of synchronisation in the transmitter. Therefore, it can achieve lower latency. NOMA can preserve user fairness with different (QoS) by control of power between the different users (weak and robust users) [3]. NOMA can provide more energy allocated to a weak user and also higher throughput of cell-edge that lead to enhances the efficiency of the user.

On NOMA downlink, the BS superimposes the data waveforms for its adjusted clients. Each user equipment (UE) utilises SIC to distinguish their signs. Figure-3 demonstrates a BS and several numbers of UEs with SIC recipients. In this system is accept that the UE_1 is the nearest to the BS and UE_j is furthest. The test for BS is to choose how to assign the power between the individual data waveforms, which is essential for SIC. In NOMA downlink, more power is divide to UE found more distant from the BS and minimal energy to the UE nearest to the BS. In this system, all UEs get a similar signal that contains the data for all clients. Every UE unravels the most grounded signals to start with, and after that subtracts the decoded motion from the gate signal. SIC beneficiary rehashes the subtraction until the point when it discovers its particular signal. UE found near the BS can drop the signs of the most distant UEs. The signal of the most distant UE share in most of the got signal, it will decipher its particular signal first.

3.1 NOMA downlink transmission in BS

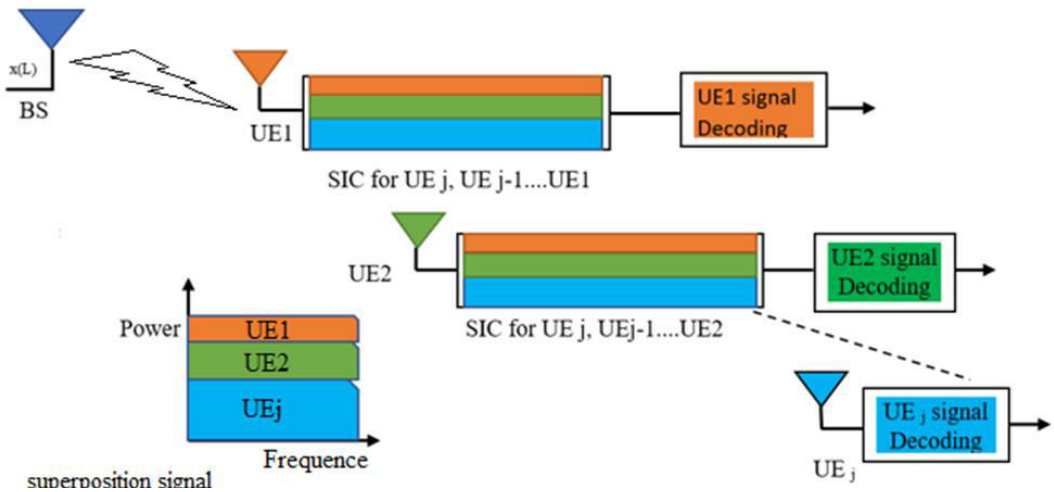

Figure-3. Three Users in the Downlink NOMA.

Then can be written the signal transmitted in the BS as:

$$X(L) = \sum_{j=1}^{j} \sqrt{\alpha_j p_T x_j(L)} \quad (1)$$

xj(L) = particular data exchange OFDM waveform.
α_k = control distribution coefficient for theUE_j. = coefficient control distribution to UE_{jj}.
P_T = add up to available power at the BS = available aggregate power at the BS.

The power assigned to each UE_jat that point moves toward becoming $P_T = \alpha_j P_L$.

To each $UE_j$the power apportioned is $P_T = \alpha_j P_L$.

The separation of UEs allots the power to the BS:

The separation allows the power between the UEs to the BS. UE_1 is the nearest to the BS, so it is designated the minimum power, though UE_j is the furthest one; subsequently, it has the highest power.

The minimum power in this situation is the UE_1 because it is nearest the BS while the highest power is the UE_j Because it is the most distant one to BS. The got motion at the $UE_j$is at that point the signal got at the UE_j as.

$$yj(L) = x(L)gj + wj(L) \quad (2)$$

From this Equation, then the gj is a channel weakening component for the connection between the BS and the UE_j. L is the (AWGN) additive white Gaussian clamor at the UE_j with mean zero and thickness N0 (W/Hz). Let us think about the remotest client first. The signal interprets first will be its particular signal since it is designated the most power as thought about the others. The signals for different clients will be view as

©2006-2019 Asian Research Publishing Network (ARPN). All rights reserved.

obstruction. Along these lines, the signal to communication proportion SNR for UE_jcan compose as [2].

$$SNR_j = \frac{Pjg^2j}{N_0W+\sum_{i=1}^{j-1} P_i g_j^2} \quad (3)$$

The transmission bandwidth for UE_1 is W which it near the BS and last signal will decode.

In the complete cancellation, we assuming the SNR at UE_1 can write as:

$$SNR_1 = \frac{P_1 g_1^2}{N_0 W}$$
(4)

In general, we can have written the SNR for UE_jas:

$$SNR_j = \frac{P_j g_j^2}{N_0 w+\sum_{i=1}^{j-1} P_i g_j^2} \quad (5)$$

The throughput (bps) at the UE can write as:

$$R_j = W \log 2(1 + \frac{P_j g_j^2}{N+\sum_{i=1}^{j-1} P_i g_j^2}) \quad (6)$$

In OFDMA, UEs are transferring to a gathering of subcarriers to get their data. Both power and data transfer capacity are partaken in similarly between all UEs. Then for UE in OFDAM, the throughput can be written as:

$$R_j = W_j \log 2(1 + \frac{P_j g_j^2}{N_j}) \quad (7)$$

That means the $W_j = \frac{w}{j}$ and $N_j = N_0 W_j$

The entirety limit with regards to both OFDMA and NOMA can be compos as:

$$R_{Total} = \sum_{j=1}^{j} R_j \quad (10)$$

The fairness index is defined by [5].

$$F = \frac{(\sum R_j)^2}{j \sum R_j^2} \quad (11)$$

This equation indicates adjuster the framework is limit and shared between the UEs, that is when F is near to 1. The limit concerning every UE drawing near to each. We can set the target of the power allocation mechanism as maximizing the capacity R_T with the fairness constraint for NOMA systems. The streamlining issue is then particular as:

$$\text{maximize } w \log 2\left(1 + \frac{P_j g_j^2}{N + \sum_{i=1}^{j-1} P_i g_j^2}\right) \text{ that is subject to : } \sum_{j-1}^{j} P_j \leq P_L \quad (12)$$

αj

$P_j \geq 0, \forall j, F = F$

3.2 NOMA uplink transmission in BS

The implementation of the uplink is different from the implementation of the downlink. In Figure-4 describe the uplink in a network with multiplexes UE_jIn NOMA. In this case, in BS used SIC to characterise the user.

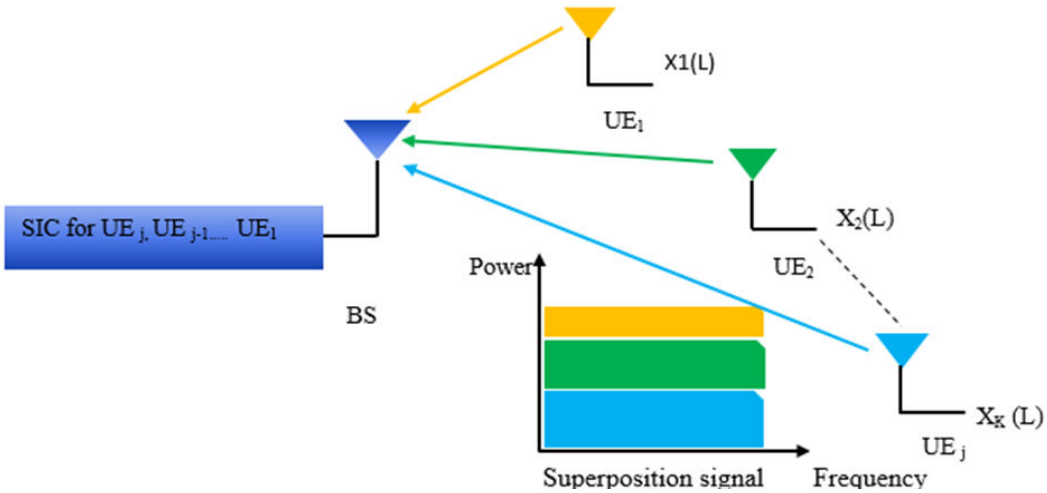

Figure-4. Three Users in the Uplink NOMA with superposition signal.

The signal in the receiver in uplink which is writing as:

$$y(L) = \sum_{j=1}^{j} xj(L)gj + w(L) \quad (13)$$

Where (gj) is the weakening in force gain of the channel. Which is using to a connection between the BS side and the UE_jSide and the next is X_j (L) denote the data waveform of the user equipment k_{th} UE. Then the W (L) is denoted AWGN for the BS with an estimation of men zero N0 (W/Hz).

©2006-2019 Asian Research Publishing Network (ARPN). All rights reserved.

The UEs is optimising of an uplink and accepting transmit powers to their area like same in the downlink. Therefore, all users in the cell phone coverage are well distributed, and the power in the received is levels from the various UE also are well divided. So, this presumption is better from the actual point because it is a need for the connection among all the UEs to optimise the power, and that maybe is challenging to perform.

The BS performs the SIC at the receiver and the nearest user signal it decodes first. Then the SNR for the UE1 can be written as:

$$R_1 = \frac{Pg_1^2}{N+\sum_{i=2}^{j} Pg_i^2} \quad (14)$$

That is where the transmission power (P) of the user equipment system UEs and N is equal (0) W.

Then including the others as interference. The farthest signal user UE_j To the BS it is the last signal decoded.

4. NOMA WITH SIC TECHNOLOGY

In this section, we explain the model system of NOMA with the SIC receiver by using SU-MIMO. We assumed the number for the user in the cell is M. While of the BS, we assumed the antennas transmit clarified as (N_t), and on the other side in receiver side at the UE, the number of antennae clarifies as (N_r). While assumed of the sub-bands as (S) and also of the bandwidth as (B). The process is as follows:

In the downlink, the BS the data transmission to all the multiple users at the same time, but to the different users with different transmission power and us can be assumed the maximum number of a user as (N_{max}).

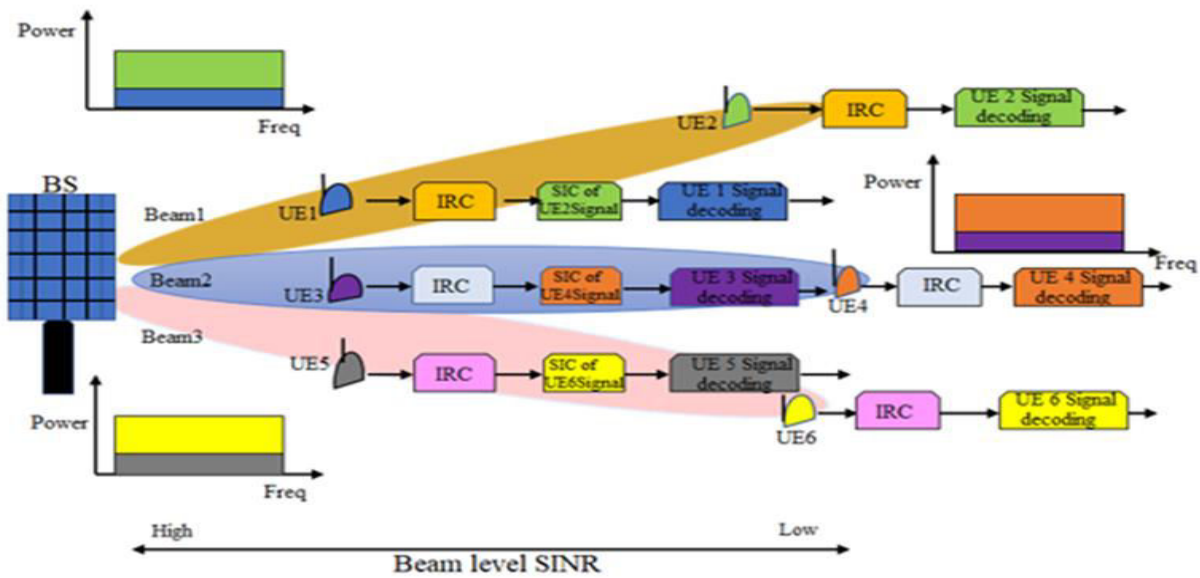

Figure-5. Basic NOMA with a SIC receiver.

In this Figure-5 we show the system of NOMA model that used by SIC in the single-user MIMO when we have the N max is 2 UE_1, UE_2. The BS is sent a superposed signal at the same time and different transmission power in the same sub-bands to pair's users UE_1, UE_2. Furthermore, this different transmission power is considered on the power level 1 to UE_1 and level 2 to UE_2, respectively. SU-MIMO systems are connected autonomously at each power level for every use. We accept UE_1 encounters better channel state, while UE_2 is with the lousy channel state. Accordingly, the transmitted energy of UE_2 is thought to be higher than the transmission power of UE_1. UE_1 achieve the signal detection in this case, the signal of the UE_2 is first detected and then dispose of by cancellation. After removing the inter-user interference between the users, then detected by the desired signal with better SINR for the UE_1 that means the desired signal directly detects by UE_2 and taking into consideration the signal in UE_1 as interference has a lower power.

4.1 Perfect SIC using in NOMA

When assuming in the perfect cancellation, we can be written the SNR for UE_j. as:

$$SNR_j = \frac{Pg_j^2}{N} \quad (15)$$

However, in general, can be written the SNR in kth UE, as:

$$SNR_j = 1 + \frac{Pg_j^2}{N+\sum_{i=j+1}^{j} Pg_i^2} \quad (16)$$

Then for each UE can be written the throughput (bps) as:

©2006-2019 Asian Research Publishing Network (ARPN). All rights reserved.

$$R_j = W \log 2(1 + \frac{Pg_j^2}{N+\sum_{i=j+1}^{j} Pg_i^2}) \quad (17)$$

Then for the OFDMA and NOMA can be written the sum capacity as:

$$R_{Total} = \sum_{j=1}^{j} R_j \quad (18)$$

4.2 Imperfect SIC using in NOMA

We assume the SIC is practical and ideal in the receiver, is tricky when we want to subtract the decoded signal without any error from the received signal. In this part of the paper, we focus on the NOMA with the SIC receiver with cancellation error. In this case, we consider the downlink only and then we can get in an easy way to consider an uplink. We remember us the SIC receiver decodes one by one the information signals to procure of the desired signal. After decoding the signal in SIC must regenerate the original waveform to subtract the original signal from the receiver signal. In the theoretically, we can do this process without any error but in practice, may find some error.

In the downlink, the SNR can be writing with cancellation error and k_{th} user as [8].

$$SNR_j = \frac{P_j g_j^2}{N_0 W + \sum_{i=1}^{j-1} P_i g_j^2 + \epsilon \sum_{i=j+1}^{j} P_i g_j^2} \quad (19)$$

Whereϵ is the cancellation blunder term that speaks to the rest of the segment of the wiped-out message signal.

5. MILLIMETER WAVE IN NOMA

The millimetre waves characterised by good qualities such as very high frequency. these specifications have been determined by the International Telecommunications Union (ITU), which recommends that it be allowed to use any products and services at broadband with high-speed frequency. Until today mm-Wave has not met with more attention and development, which makes it widely to use in wireless networks with high speed. In wireless networks mm-waves are used for a variety of services, for example, it allows to use of higher data rates, more than 10Gbps.

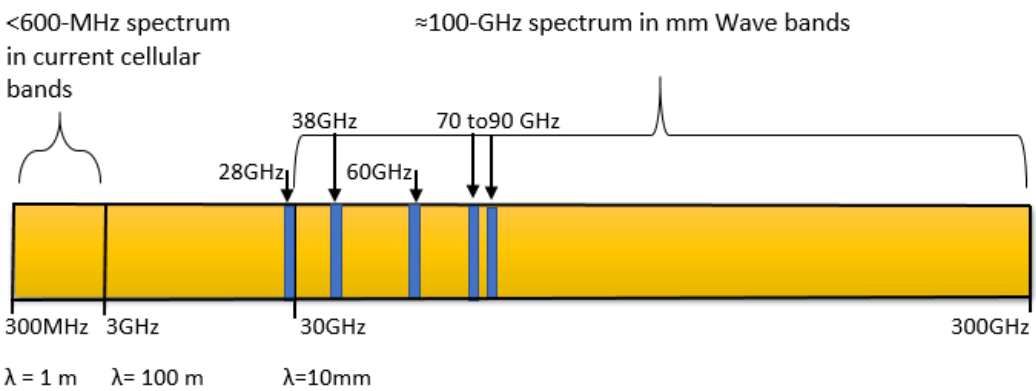

Figure-6. millimetre-wave in NOMA[9] .

We can define the mm-Wave technology in the following:

First, mm-wave can available spectrum more than the (10x more) and also can get a more significant number of channels more than (5-100x). For example, the sub 6 GHz band presentation the channel widths of 20MHz.However, the mm-Wave bands, groups are presentation the channel widths more than 500MHz and even up or equal up to 1G. The ability to transfer 1 Gigabit of capacity is it needed to multiple GHz of the spectrum to doing this big transmit. Second, mm-Wave use to design a large number of antenna arrays. Narrow beams which offer to decrease the interference and to get better spectrum reuse. That means the multiple users can share on the same channel. Therefore these competencies enable to get off very high throughput and also low packet delay, and this leads to increasingly required of more services and apply for five generations [9]. Therefore it is possible to describe the mm-Wave bands. Which it short or medium ranges. That is mean, it used only for a few kilometres.

For this reason, the best suited for propagation in the urban environment, in addition, this type of waves with a short ranger is best to provide from 100 to 300 meters and also better to fixed broadband services and backhaul for a small cell which is very important for 5G networks in the mm-Wave spectrum technology, there are two critical bands the first is V-Band and the second is E-Band. The V-Band describes the spectrum between 57GHz and in the 66 GHz that means it this block of GHz of the spectrum, and all this is unlicensed and cannot too much to depend on any country [10]. The E-Band it is possible to find it at the range between 71-76 GHz and the range of 81-86 GHz. E-Band It is possible to find it in Gigabit/s information, rates, which gave the highest amount of the obtainable spectrum 10 GHz. This amount is without any amount of oxygen absorption, and this accepts a more extended space compared for the v-Band. Proposes mm-Wave gives more efficiencies that make it adequate for having a vast range of the application program. A most prominent aspect of multi-Gigabit/s ability to perform and

©2006-2019 Asian Research Publishing Network (ARPN). All rights reserved.

sub-ms latency process make it favourable for backhaul and fronthaul.

Practical application also supports the position where fiber is not ready, or the cost for fiber deployment is expensive.

6. CURRENT NOMA SOLUTIONS

The first uncovered of NOMA technology for 5G network is the Saito et al. [11]. Moreover, they are demonstrating that the performer of NOMA is better than AOM in terms of user fairness and size of capacity. Therefore, starting all the researchers in this field over the globe to test how can use the concept of NOMA instead of OMA in new next radio access technique 5G. Most of the research in NOMA concentrates to exploitation single input, single-output (SISO), which plays an essential role in the efficiency of user fairness and power allocation. In NOMA, the purpose of power allocation is not only to achieve the maximise sum-rate but also maximise user fairness. When using NOMA will all power allocated to the active user if the target to achieve the highest sum rate than no gain achieves over OMA. From the literature review, for example, in [12]. The proposal of a dynamic power allocation system which consists of individual rates for all active and weak users in NOMA which is worth much higher than the corresponding rates in OMA. While in [13], the expression of user fairness examines, of max-min data rate and vice versa, outage likelihood, respectively. The researchers are designing polynomial algorithms, which have low complexity and can achieve optimal solutions of both cases, max-min data rate and min-max data rate. Moreover, by integrating NOMA with MIMO can achieve improved performance in NOMA. In the case of integrating NOMA with MIMO, the users can use division into clusters and can use NOMA only between the users oneself cluster. To lessen the computational load depends on random pairing [14]. Therefore, and because channel correlation and gain variation in [15] proposed greedy user, pairing algorithm to achieve optimal performance. When distributed users in clusters, a preceding joint vector divided by users the same cluster, in this case, can convert MIMO channel into SISO channels. For this reason, can see progress in performers of NOMA over the performance of OMA [16]. Also can see on [14], the framework of MIMO-NOMA whose remove inter-cluster interference when using Zero-forcing precoding. In [17] is proposed to use NOMA with massive MIMO by all the works are limited on the single-cell system. The researchers in the last time are starting to discuss using NOMA in the other case when using the multi-cell network. Besides, NOMA favourable to use with mm-wave and, clear light communications [18].

7. CHALLENGE NOMA- MASSIVE MIMO

Before using NOMA as part of the next generation 5G there are some challenges for this technology. One of these challenges, for example, in the downlink, the transmitter power, can assign to all the user in the cells based on those respective CSI. Therefore, this technique is suitability for both the CSI and channel estimation planner. With proper signal, planning can achieve the best performance. Moreover, the advantage of NOMA has been demonstrating the perfect state of ideal procurement of CSI information on the transmitter side. One conceivable arrangement maybe can utilisation of a restricted criticism channel to get CSI [19]. That maybe requires extra bandwidth (BW) to pass the different channel quality indicators. We conclude from that, and it is imperative to choose the user and power allocation scheme when the transmitter needs to achieve under defective CSI or with restricted, feedback. In the multi-band communications, increase the peak-to-average-power ratio. The reason for this is because running a transmitter power amplifier within a nonlinear work area. That will cause the considerable effect of the signal distortion in the output of the power amplifier. The impact of the peak-to-average-power ratio is in this basic form to determine which systems are used to accomplish the best performance of NOMA. The idea of handing-off in [20].

Which it can connect to non-orthogonal organises transmissions to broaden the cell scope between Multi-Carrier Small Cell and macro-cell to perform a more capacity gain. The Kalokidou hybrid scheme in the [21] is proposed to combine the belief of the topological interference direction with the NOMA scheme to achieve excellent performance of the sum rate in the system. Additionally, it can achieve more goal by using a hybrid method, a technique to increase the capacity of the network. So, the main challenge in this study is how distribution the average power to all the users, especially in the intensive system. Can achieve that by choosing an efficient power distribution system. To accept NOMA in the fifth generation must be active as far as the system and scalability to achieve all the goals of the fifth generation.

Moreover, NOMA must help heterogeneous traffic and various radio conditions. Therefore, until now, only the more significant part of the work has been committed to confirming the performance of NOMA. But all this work in the in-theory side, but not in the practice side. Although in [22]. The software-defined radio present in NOMA as the model, more finished the-air experiments are required to demonstrate NOMA's potential in the 5G networks.

8. CONCLUSIONS

In this paper, we are tender the NOMA model and display its higher performance under conventional OFDMA in the conditions of the total limit the capacity, and sum the energy efficiency and also sum spectral efficiency. In this case, we have additionally said the effect an instance of being imperfect the SIC receiver on the performance framework. With it is easy to perceive that in the features, NOMA technology state as the most active applicant. In the future 5G systems. However, that as it may, in any case, a few difficulties for effective execution of NOMA. First of the challenge requires high computational energy to run SIC calculations, especially for the high number of clients at high information rates. Second, of the challenge power allocation enhancement as a testing issue, especially when the UEs are moving quickly to the system. At last, SIC receiver is delicate to

©2006-2019 Asian Research Publishing Network (ARPN). All rights reserved.

cancellation blunders which can without much of a stretch happen in fading channels. It can be executed with some other assorted variety systems a similar kind of (MIMO) or with signal plans to build. The unwavering quality and in like manner, diminish the decoding errors. There are late works that execute for MIMO technology, and NOMA technology in the papers [11-8], the effect of channel state data (CSI) examined in [18] paper, the limit augmentation issue talked about in [18], and blackout likelihood articulations determined in [19]. The present best in class for the NOMA technology, however, is Static image a long way from its possible and requires assisting examination. Furthermore, the future for Millimetre-wave -5G cellular communication is can be improved the Bandwidth and higher data rates. The research is going on to remove the limitations and Reliability and efficiency in using these spectra. Disadvantages of mm-wave can be in this part the costs in the manufacturing is higher. Therefor to an extremely high degree of the frequencies-significant attenuation lessening, the mm Waves has a lengthy separation application. The power of concrete mm-wave and the Interferences with the rain and oxygen is walling less. Moreover, the advantages of using the mm-wave in radio range are to still rather undeveloped. More transfer speed (bandwidth) is accessible, hence higher information rates accomplished, Security and security are better at the [20]. Therefore, the data rate in wireless technologies is expected an increase to be from 40 to 100 times faster in wireless technologies. Also, the frequency range will be expected from 25GHz to 300GHz. Moreover, the wavelength will be increasing between this rang 10 mm to 1 mm. At present, the (NOMA) with the (SIC) for the technology of Future (RA). NOMA has attracted considerable attention recently, consequent [21]. More apply for five generations [22].

REFERENCES

[1] Refik Caglar Kizilirmak., "Non-Orthogonal Multiple Access (NOMA) for 5G Networks"., 2016

[2] D. Tse and P. Vishwanathan. 2005. "Multiuser Capacity and Opportunistic Communication, Fundamentals of Wireless Communication. Cambridge University Press".(JIOAE).

[3] Y. Saito et al., 2013. "System-Level Performance Evaluation of Downlink Non-Orthogonal Multiple Access (NOMA)". IEEE.

[4] Y. Saito et al., 2013."Non-Orthogonal Multiple Access (NOMA) for Future Radio Access". IEEE.

[5] Ming Zeng et al., 2017."Capacity Comparison between MIMO-NOMA and MIMO-OMA with Multiple Users in a Cluster". IEEE.

[6] Z. Ding and H. V. Poor. 2016. "Design of Massive-MIMO-NOMA with Limited Feedback". IEEE.

[7] Linglong Dai and Bichai Wang.2015. "Non-Orthogonal Multiple Access for 5G: Solutions, Challenges, Opportunities, and Future Research Trends".IEEE.

[8] J. G. Andrews and T. H. Meng. 2003. "Optimum Power Control for Successive Interference Cancellation with Imperfect Channel Estimation". IEEE.

[9] https://blog.advaoptical.com/en/is-wireless-the-new-fixed-mmwave-gains-momentum.

[10] Z. Ding, F. Adachi and H. V. Poor. 2016. "The Application of MIMO to Non-Orthogonal Multiple Access". IEEE.

[11] Y. Saito et al., 2013. "Non-orthogonal multiple access (NOMA) for cellular future radio access". IEEE.

[12] Z. Yang, Z. Ding, P. Fan and N. Al-Dhahir. 2016. "A general power allocation scheme to guarantee the quality of service in downlink and uplink NOMA systems". IEEE.

[13] S. Timotheou and I. Krikidis. 2015. "Fairness for non-orthogonal multiple access in 5G systems". IEEE.

[14] Z. Ding, R. Schober and H. V. Poor. 2016. "A general MIMO framework for NOMA downlink and uplink transmission based on signal alignment". IEEE.

[15] B. Kim et al., 2013. "Non-orthogonal multiple access in a downlink multi-user beamforming system. In Proc". IEEE.

[16] M. Zeng et al., 2017. "Capacity comparison between MIMO-NOMA and MIMO-OMA with multiple users in a cluster". IEEE.

[17] Q. Sun, et al. 2015. "On the ergodic capacity of MIMO NOMA systems". IEEE

[18] Z. Ding and H. V. Poor. 2016. "Design of massive-MIMO-NOMA with limited feedback," IEEE

[19] J. B. Kim and I. H. Lee. 2015. "Non-orthogonal multiple access in coordinated direct and relay transmission". IEEE.

[20] J. Kim, et al. 2006. "Mitigating error propagation in successive interference cancellation. IEICE.

[21] H. Zhu. 2015. "Performance of non-orthogonal multiple access with a novel interference cancellation method". IEEE.