VOL. 14, NO. 21, NOVEMBER 2019 ISSN 1819-6608
ARPN Journal of Engineering and Applied Sciences

www.arpnjournals.com

DESIGN AND CONSTRUCTION OF BACKPACK MOBILE CHARGER

Mojisola R. Usikalu, Emmanuel Adebesin and Leke N. Obafemi
Department of Physics, College of Science and Technology, Covenant University, Ota, Nigeria
E-Mail: moji.usikalu@covenantuniversity.edu.ng

ABSTRACT

Energy drives all economy sectors. It could be very frustrating to have mobile device with no power to charge it. Due to the erratic nature of power supply available during the day as well as night in Nigeria, most importantly in rural areas necessitated the construction of solar-powered backpack mobile charger. Solar backpack mobile charger would store energy from solar cells which would then be utilized to charge electronic gadgets, such as a mobile phone or iPod. The mobile charger was constructed by connecting 5 Wattage of 12 V maximum output solar PV voltage to a series feedback voltage regulator. This was also connected to the comparator, to the rechargeable battery and finally to a regulator. During testing of the device it was observed that the solar panel supply 12 V maximum output voltage at no load and 11.25 V under load condition. The voltage at the USB port of the charger varies between 4.00 V and 5.10 V with a highest current of about 240 mA. Construction of devices such as this is one of the approaches of applying green innovation to solve energy issue. The study hereby recommended that Nigerian Government should create enabling environment so that these devices can be fabricated locally on the large scale in order to boost our economy, at the same time will also reduce the rate of unemployment among the youth.

Keywords: backpack, mobile charger, solar energy, PV.

1. INTRODUCTION

Energy is very important for our day to day activities. Equipment such as, mobile devices, speaker, laptops and fans depend on availability of energy. Most of the energy used to power our environment is gotten from fossil fuels, non renewable energy source like coal and petrol. With the use of fossil fuel since it is non renewable energy source it will get exhausted as time goes on. Another issue is the pollution of the environment and increase in the emission of carbon dioxide which gives rise to increase in global temperature and consequently causing global warming [1]. Global warming is a very pressing issue, because the polar ice caps on earth are melting, and there is a great probability of high droughts and heat waves [2]. Air pollution is also an issue because low air quality can cause serious respiratory and other infectious diseases [3]. Fortunately, there are other ways of generating energy which are from renewable energy sources, like the sun, wind, tides, biomass and geothermal. Though, may be costly at the onset but payed off with time and energy from renewable sources are clean, environmental friendly and is associated with no health hazards [4].

The sun has a temperature of 5776 K. Solar energy gets its energy from the sun. Sunlight is a renewable source of energy which is converted to useable energy by the solar panels. Solar energy can be grouped into two main types. Solar photovoltaic (PV) panels readily change solar energy to useable form of energy making use the PV cell which comprises of a semiconductor material. Concentrating solar power (CSP) also change the energy concentrated from the sun to a heat receiver which changes the heat into mechanical energy, can be used to supply solar thermal electricity. Solar cells are very important, because they could be used to substitute coal and oil and turns the world's main source of energy. Solar power is one of the greatest modern energy technologies ever known [4, 5]. Energy gotten from the sun is free and abundant. This is over 6000 times the total amount of energy that the whole planet needs in a year gets to the earth in one day [6, 7]. The solar cell has some problems; the most known fact is that solar cells are fragile, because they are covered with glass protectors and costly at the moment [4]. Most people that make use of solar panels at home are people of high socio economic status that can drop huge initial investment. Affordable solar cells can make renewable sources of energy easier for people of low socio economic backgrounds.

Nigeria as the giant of Africa with about 186 million people is facing lot of challenges in which power supply is one of them. As the population of Nigeria is on the increase so also is the increase in the power demand without a dependable supply [7]. As reported by [8] at present, Africa has the largest growth rate of cellular subscribers. The increase is due to availability of pay as you go services, and the convenience they offer over other modes of telecommunication. Due to the erratic nature of power supply available during the day as well as night in Nigeria, most importantly in rural areas call for the design of solar-powered phone charger, to enable people to be able to make use of their device when they are outside their home and when there is power outage during the day. Therefore, the aim of this study is to design and construct a solar backpack charger to charge different mobile devices. Figure-1 is the block diagram of the constructed backpack charger.

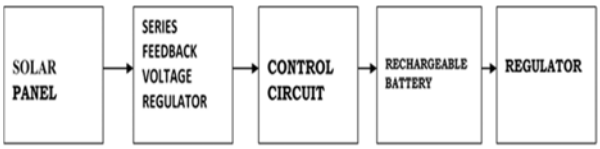

Figure-1. Block diagram of solar powered mobile phone charger.

2. DESIGN AND CONSTRUCTION

The design and construction of the device is described as follows: The solar panel is a PVC solar cell which is connected electrically to a supportive part. The solar panel is used as a part of a big photovoltaic system to produce and generate electricity in our home application [9]. The solar panel is rated by its DC output supply of power under standard test conditions (STC). For the purpose of this work, the specification of the solar panel used is given below: Peak power =5 W

Optimum power voltage (VMP) = 12 V
Optimum power current (IMP) = 165 mA
Open circuit voltage (VOC) =14.4 V
Short circuit current (ISC) = 190 mA
At STC (Irradiance 1000 W/m^2, Module temperature 25 °C)
Area= 7.5 x 12cm

The feedback voltage regulator circuitry acts as a comparator circuit. It compares the output of the first regulator stage with the needed voltage level to charge the battery. It sends an error signal back to the base of transistor T2. This error signal is used in adjusting the voltage level. The control circuitry is responsible for switching between the solar panel and rechargeable battery depending on which is available. If the sunlight is available, the solar panel charges the phone battery but if unavailable, it switches to the rechargeable battery to charge the phone. The major component in this stage is a voltage sensitive relay. Rechargeable battery, is type of storage device, secondary cell or accumulator are electrical battery which when it discharged after been use it can be recharged over and over again. But it is not so for the primary battery which when the full charge is used up it cannot be recharged. Rechargeable batteries are a little bit costly but are environmental friendly than the non-rechargeable batteries. In this project, the rechargeable battery stores the energy. This will be used when there is unavailability of solar energy. The final regulator stage is the part of the circuit by which a 5 V zener diode is used to regulate the voltage going to be used to charge the mobile device to 5 V.

2.1 Operation of the solar power-driven mobile device charger

The output voltage of the solar panel under sunlight is about 11-12 V depending on the amount of solar irradiance. With the help of the network formed by the resistor R1 and R2, the voltage which charges the recharge battery is maintained at 5 V. This is important because the voltage of the battery to recharge is 6 V. In case of any change of signal that recharges the battery, a signal is send by the transistor T2 and this will regulate the level back to the required value. The Diode 6 distinguished the solar charging system from the charging system formed by the rechargeable battery. This will stop the bake flow of current between the two parts. In a way to control the relay voltage supplied from the output of the solar panel through a 1k resistor and a 5 V zener diode. This is noticed by transistor T3 and it gives order to relay to make contact when the solar energy is good to recharge the mobile battery. When there is low solar irradiance energy to charge the mobile device battery, the relay changed the load to the rechargeable battery. The capacitor C1 and diode D5 are incorporated to avoid irregular switching of the relay also to avoid back rush of the E.M.F triggered by switching of the relay. The circuit diagram is shown in Figure-2

The series resistor at the output side depends on the amount of the input voltage gotten from the emitter of T1, the voltage rating of the zener diode at the base current of the transistor and the zener diode current using equation 1-5 [10].

$$R_8 = \frac{v_{in} - v_z}{i_B - i_z} \quad (1)$$

$$R_4 = \frac{v_{in} - v_z}{i_z} \quad (2)$$

$$R_3 = \frac{v_{in} - v_z}{v_B} \quad (3)$$

By voltage divider rule:

$$V_2 = \frac{R_2 \times v_{out}}{R_1 + R_2} \quad (4)$$

By solving:

$$R_2 = \frac{v_2 R_1}{v_{out} + v_2} \quad (5)$$

ARPN Journal of Engineering and Applied Sciences

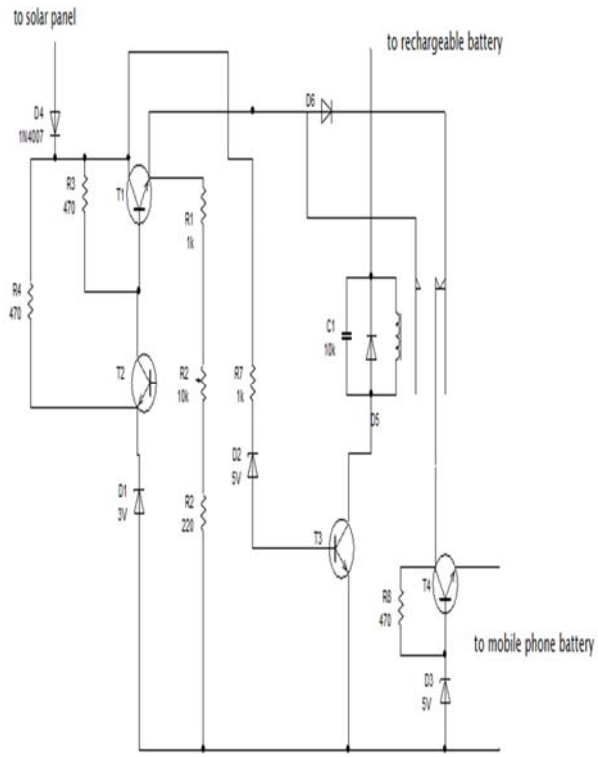

Figure-2. Circuit diagram of solar powered mobile device charger.

3. RESULTS AND DISCUSSIONS

Having constructed the circuit on board and the casing done satisfactorily, the project was assembled. Assembling was done by fixing the circuit board into the casing and screwed properly to prevent vibration. It was ensured that the enclosure was not too small for the board so as to prevent compression or breakage of the board or any other components. The rechargeable battery was also properly place to avoid shaking. Proper and tight connections were ensured between components.

In order to test the workability of the device effort was made to measure some parameters from the device when placed under the sun. The charger was placed in the sunlight and it was observed that the normally open relay switch on to close the contact, this is an indication that the panel is transferring the load from the rechargeable battery to the device. The same operation was observed when the charger was operated indoor. This suggested that the control circuitry is working perfectly. The voltage on load was recorded at the output stage of the solar panel on hourly basis from 10.30 am to 4.30 pm (Figure-4). It was observed that there was voltage drop when the system was loaded. The same observation was noticed as the same procedure was carried out at the output stage of the charger (Figure-5). Though, the voltage at the charging point is nearly the same but highest value was obtained on day two at 1:30 pm. This suggests that solar energy depends on the solar irradiance and the climatic condition of the environment as the day two was having a clear weather than day one and three. The output current at the solar panel output was measured as shown in Table-1 and it was observed to drop on connecting to the load which is in consonance with known theory.

Figure-3. Solar backpack Charger.

Table-1. Mean output current at solar panel.

Time	current
10:30am	0.22
11:30 am	0.22
12:30 pm	0.24
1:30 pm	0.23
2:30 pm	0.23
3:30 pm	0.17
4:30 pm	0.2

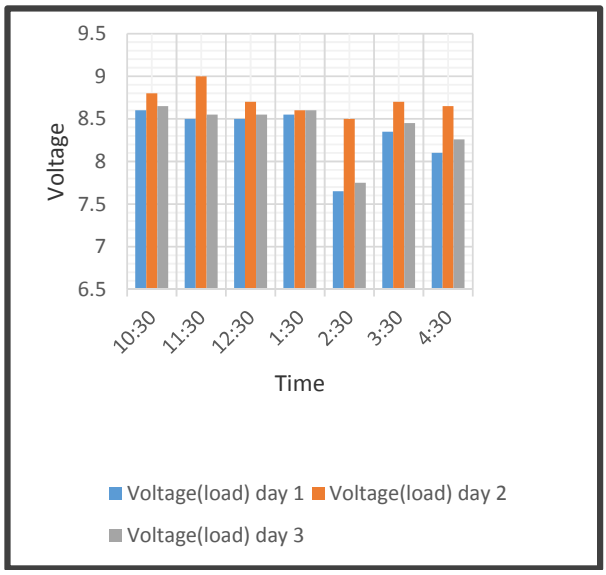

Figure-4. Voltage measured at output of solar panel.

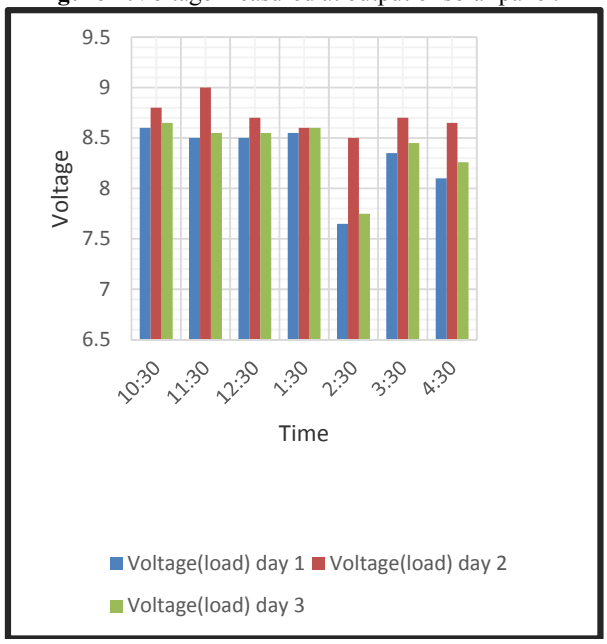

Figure-5. Voltage measured at mobile device.

4. CONCLUSIONS

Solar backpack charger for charging of mobile devices was successfully constructed. The charger made available regular supply of electric power to the load (device) with the help of a controlling circuit. The solar panel supplied the circuit with maximum output voltage of 12 V at no load and 11.25 V under load condition. At the USB port of the charger, the voltage varies from 4.00 V - 5.10 V with a highest current of about 240 mA. The project is very smart and environmentally friendly, easy to operate and requires very little maintenance. This project can be used to charge mobile device as an alternative power supply in the remote areas of Nigeria. Government should empower the youth by providing enabling environment so that these types of devices can be produced locally on the large scale so as to improve the economy of the nation. Floating companies that can produce solar backpack charger will create job opportunities and equally provide employment for the teaming number of unemployed youth.

REFERENCES

[1] Usikalu M. R. 2009. Health Impact of Climate Change Due to Combustion of Fossil Fuel. International Journal of Physical Sciences.4(13):880-884.

[2] Simmons 2009 5 Deadliest effects of Global warming, Environmental Graffiti, pp. [Online].Available at: http://www.environmentalgraffiti.com/sciencetech/5-deadliest-effects-of-global-warming/276.

[3] Akinyemi M. L and Usikalu M. R.2013. Investigation of Emission of Carbon Monoxide from Anthropogenic Sources in Lagos, Nigeria. International Journal of Physical Sciences.8 (21):1128-1132.

[4] Ayara W. A., Omotosho T. V., Usikalu M. R., Singh M. S, Suparta V. 2017.Development of a solar charged laboratory bench power supply. Journal of Physics: Conference Series. 852(1): 012044.

[5] Abodunrin T. J., Boyo A. O., Usikalu M. R., Obafemi L. and Oladapo O. 2017.Microstructure characterization of onion (A. cepa) peels and thin films for dye sensitized solar cells. Materials Research Express, iopscience.iop.org/article/10.1088/2053-1591/aa6138/meta

[6] Ray Boreham. 2008. The Potential Importance of Solar Energy for the Future', Ezine Articles. 1-2.Available athttp://ezinearticles.com/?The-Potential-Importance-of-Solar-Energy-For-the-Future&id=3934429.

[7] World Bank. 2016. United Nations Population Division. World Population Prospects: 2017 Revision. Census reports and other statistical publications from national statistical offices. Available https://data.worldbank.org/indicator/SP.POP.TOTL

[8] Usikalu M. R., Rotimi S. O. and Achuka J. A. 2016. Effects of 900 MHz Radio frequency Radiation on the Rats' Liver.JurnalTeknologi.78(6-7):19-24.

[9] Spector A. Z. 1989. Achieving application requirements. In Distributed Systems, ACMNew York, USA ISBN:0-201-41660-3, 19-33.

[10] Romeo N. 2010. An innovative process suitable to produce high-efficiency CdTe/Cds thin-film modules. Solar Energy Materials and Solar Cells. 1(94): 2-7.