VOL. 14, NO. 24, DECEMBER 2019 ISSN 1819-6608
ARPN Journal of Engineering and Applied Sciences

www.arpnjournals.com

HYDRODYNAMIC EFFECTS OF SECANT SLIDER BEARINGS LUBRICATED WITH SECOND - ORDER FLUIDS

S. Sampathraj[1], T. Bharathi[1], V. Sudha[2] and Sundarammal Kesavan[3]
[1]Department of Mathematics, Loyola College, Chennai, India
[2]Department of Mathematics, Sri Kanyaka Parameswari Arts and Science College for Women, Chennai, India
[3]Department of Mathematics, SRM Institute of Science and Technology, Chennai, India
E-Mail: sudarsampath007@gmail.com

ABSTRACT

The constitutive equations governing the flow of secant slider bearings is analysed in this study. The bearing is lubricated with second order fluid. An attempt has been made to solve the equations governing the model and the characteristics of secant slider bearings is presented. An expression for the fluid film pressure is derived. The results reveal that second order fluids enhances the performance characteristics of lubrication indicating that second order fluids are better than Newtonian fluids.

Keywords: fluid film pressure, Newtonian fluids, second order fluids, slider bearings.

INTRODUCTION

Slider bearings play a vital role in many mechanical components in Industry. The use of Non-Newtonian fluids as lubricants in bearings enhances the performance of characteristics of machinery. Several researchers have investigated the effects of second-order fluid in bearings. Bujurke *et al* [2] studied the lubrication effects of slider bearings by a second grade fluid with reference to synovial joints. W. G. Sawyer and J. A. Tichy [3] discussed in detail the performance characteristics of Non-Newtonian lubrication with the second-order fluid. Z. Li, P. Huang, *et al* [4] analysed the hydrodynamics effects of lubrication with second-order fluid. Mathematical Modelling of slider bearing of various shapes with combined effects of porosity at both the ends, anisotropic permeability, slip velocity, and squeeze velocity were investigated by Rajesh C. Shah and Nayen I. Patel [6]. Siddangouda Apparao *et al* [8] investigated the Non-Newtonian Effects of second-order fluids in inclined Slider Bearings. K. Thangavelu *et al* [11] investigated the effects of viscosity variation in squeeze film lubrication of circular stepped plates.

In this paper an effort has been made to study the hydrodynamic effects of secant slider bearings lubricated with second order fluids. The equations' governing the flow is highly nonlinear and an approximate method is employed to solve them.

MATHEMATICAL FORMULATION

The geometry constitutes a secant slider bearing lubricated with second order fluid. The lower surface of the bearing has a pure tangential sliding motion relative to the upper surface. The fluids constitutive equation for incompressible homogeneous of the second-order, based on the postulate proposed by Coleman and Noll [1] and is given by

$$T_{ij} = \alpha_0 A(1)_{ij} + \alpha_1 A(2)_{ij} + \alpha_2 A(1)_{ik} A(1)_{kj} - p\delta_{ij}$$

where T_{ij} is the stress tensor, p is the pressure and α_0, α_1 and α_2 are material constants.

The Cartesian components of the stress tensor in the two-dimensional case are,

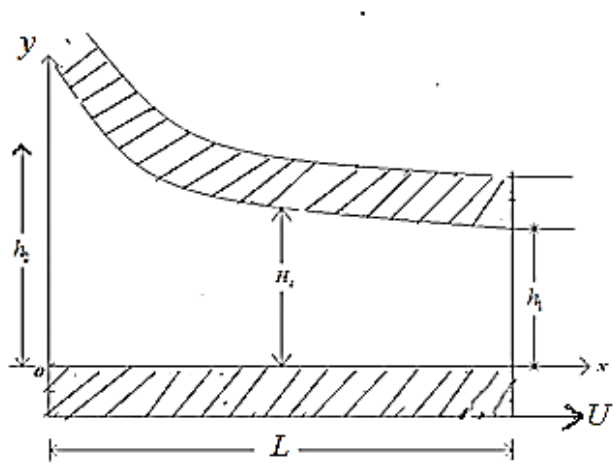

Figure-1. Secant slider bearing.

$$T_{xx} + p - 2\alpha_0 \frac{\partial u}{\partial x} = 2\alpha_1 \left[\left(\frac{\partial v}{\partial x}\right)^2 + \left(\frac{\partial u}{\partial x}\right)^2 + \frac{\partial u}{\partial x}\left(u\frac{\partial u}{\partial x} + v\frac{\partial u}{\partial y}\right)\right] + \alpha_2 \left[4\left(\frac{\partial u}{\partial x}\right)^2 + \left(\frac{\partial u}{\partial x} + \frac{\partial v}{\partial x}\right)^2 \right]$$

$$T_{xy} - \alpha_0 \left(\frac{\partial v}{\partial x} + \frac{\partial u}{\partial y}\right) = \alpha_1 \frac{\partial}{\partial x}\left(u\frac{\partial v}{\partial x} + v\frac{\partial v}{\partial y}\right) + \alpha_1 \frac{\partial}{\partial y}\left(u\frac{\partial u}{\partial x} + v\frac{\partial u}{\partial y}\right) + 2\alpha_1 \left(\frac{\partial u}{\partial x}\frac{\partial u}{\partial y} + \frac{\partial v}{\partial x}\frac{\partial v}{\partial y}\right) + 2\alpha_2 \left[\left(\frac{\partial u}{\partial x} + \frac{\partial v}{\partial y}\right)\left(\frac{\partial v}{\partial x} + \frac{\partial u}{\partial y}\right)\right]$$

$$T_{yy}+p-2\frac{\partial u}{\partial y}\alpha_0=\alpha_1\left[\left(\frac{\partial v}{\partial x}+\frac{\partial u}{\partial y}\right)+4\left(\frac{\partial v}{\partial y}\right)^2\right]$$
$$+2\alpha_1\left[\left(\frac{\partial u}{\partial x}\right)^2+\left(\frac{\partial v}{\partial y}\right)^2+\frac{\partial}{\partial y}\left(u\frac{\partial u}{\partial x}+v\frac{\partial v}{\partial y}\right)\right]$$

The film thickness is,

$$H_s=h_2\sec\left\{\frac{\pi(L-x)}{2L}\right\};0<x\le L \tag{1}$$

where L is the length of the bearing.

The momentum and continuity equations are,

$$\frac{\partial}{\partial x}(T_{xx})=-\frac{\partial}{\partial y}(T_{xy}) \tag{2}$$

$$\frac{\partial}{\partial x}(T_{xy})=-\frac{\partial}{\partial y}(T_{yy}) \tag{3}$$

$$\frac{\partial u}{\partial x}=-\frac{\partial u}{\partial y} \tag{4}$$

Assume that the non-dimensional quantities:

$$u^*=\frac{u}{U},v^*=\frac{v}{V},x^*=\frac{x}{L},y^*=\frac{y}{\in L},$$
$$p^*=\frac{\in^2 L}{\phi_0 V},H_s^*=\frac{H_s}{h_1},\in=\frac{h_1}{L} \tag{5}$$

where V is the characteristic velocity and $\in$ is a very small quantity.

Hence,

$$\frac{\partial p}{\partial x}=\alpha_0\frac{\partial^2 u}{\partial y^2}+\alpha_1 u\frac{\partial^3 u}{\partial x\partial y^2}+\alpha_1 v\frac{\partial^3 u}{\partial y^3}+\alpha_1\frac{\partial^2 u}{\partial y^2}\frac{\partial u}{\partial x}$$
$$+\alpha_1\frac{\partial^2 v}{\partial y^2}\frac{\partial u}{\partial y}+4\alpha_1\frac{\partial u}{\partial y}\frac{\partial^2 u}{\partial x\partial y}+2\alpha_2\frac{\partial u}{\partial y}\frac{\partial^2 u}{\partial x\partial y} \tag{6}$$
$$\frac{\partial p}{\partial y}=(4\alpha_1+2\alpha_2)\frac{\partial^2 u}{\partial y^2}\frac{\partial u}{\partial y}$$

The above equations are solved using the boundary conditions,

$$u=U,v=0\ at\ y=0 \tag{7.a}$$

$$u=0,v=0\ at\ y=H_s \tag{7.b}$$

$$\int_0^{H_s}(p-\tau_{xx})dy=0\ \ at\ x=0,x=L \tag{7.c}$$

Assuming,

$$u(x,y)=m(x)y^2+n(x)y+u_0 \tag{8}$$

From (3) and (7.a) and (7.b) we get,

$$u(x,y)=m(x)y^2+n(x)y+U \tag{9}$$

$$v(x,y)=-\frac{dm}{dx}\frac{y^3}{3}-\frac{dn}{dx}\frac{y^2}{2}$$

$$\text{where } m(x)=\frac{3UH_s+c}{H_s^3},n(x)=\frac{-4UH_s+c}{H_s^2} \tag{10}$$

when c is an arbitrary constant .

Substituting (9) and (10) into (6) we get,

$$\frac{\partial p}{\partial x}=2\alpha_0\left(\frac{3UH_s+c}{H_s^3}\right)+4y^2(2\alpha_1+\alpha_2)\frac{d\left(\frac{3UH_s+c}{H_s^3}\right)^2}{dx}$$
$$+4y(2\alpha_1+\alpha_2)\frac{d\left(\left(\frac{3UH_s+c}{H_s^3}\right)\left(\frac{-(4UH_s+c)}{H_s^2}\right)\right)}{dx}$$
$$+\left(\frac{3\alpha_1+2\alpha_2}{2}\right)\frac{d\left(\frac{-(4UH_s+c)}{H_s^2}\right)^2}{dx}+2U\alpha_1\frac{d\left(\frac{3UH_s+c}{H_s^3}\right)}{dx} \tag{11}$$

$$\frac{\partial p}{\partial y}=4(2\alpha_1+\alpha_2)\left(\begin{array}{l}2\left(\frac{3UH_s+c}{H_s^3}\right)^2y\\+\left(\frac{3UH_s+c}{H_s^3}\right)\left(\frac{-(4UH_s+c)}{H_s^2}\right)\end{array}\right)$$

From (11),

$$p(x,y)=2\alpha_0\int\left(\frac{3UH_s+c}{H_s^3}\right)dx+4(2\alpha_1+\alpha_2)\left(\frac{3UH_s+c}{H_s^3}\right)^2y^2$$
$$+4(2\alpha_1+\alpha_2)\left(\frac{3UH_s+c}{H_s^3}\right)\left(\frac{-(4UH_s+c)}{H_s^2}\right)y$$
$$+\left(\frac{3\alpha_1+2\alpha_2}{2}\right)\left(\frac{-(4UH_s+c)}{H_s^2}\right)^2+2U\left(\frac{3UH_s+c}{H_s^3}\right)\alpha_1+d \tag{12}$$

where d is a constant.

The average pressure distribution p across the film thickness is,

$$p=\frac{1}{H_s}\int_0^{H_s} p\,dy$$

$$=2\alpha_0\int\left(\frac{3UH_s+c}{H_s^3}\right)dx+\frac{4}{3}(2\alpha_1+\alpha_2)\left(\frac{3UH_s+c}{H_s^3}\right)^2 H_s^2 \tag{13}$$
$$+2(2\alpha_1+\alpha_2)\left(\frac{3UH_s+c}{H_s^3}\right)\left(\frac{-(4UH_s+c)}{H_s^2}\right)H_s$$
$$+\left(\frac{3\alpha_1+2\alpha_2}{2}\right)\left(\frac{-(4UH_s+c)}{H_s^2}\right)^2+2U\left(\frac{3UH_s+c}{H_s^3}\right)\alpha_1+d$$

The average total stress is,

$$\frac{1}{H_s}\int_0^{H_s}(p-\tau_{xx})\,dy=0 \quad \text{at } x=0 \text{ and } x=L \tag{14}$$

where $\tau_{xx}=\frac{1}{H_s}\int_0^{H_s}\tau_{xx}dy$

$$=\phi_2\left[\begin{array}{l}\frac{4}{3}\left(\frac{3UH_s+c}{H_s^3}\right)^2 H_s^2\\ +2\left(\frac{3UH_s+c}{H_s^3}\right)\left(\frac{-(4UH_s+c)}{H_s^2}\right)H_s\\ +\left(\frac{-(4UH_s+c)}{H_s^2}\right)^2\end{array}\right] \tag{15}$$

From (14),

$$2\alpha_0\int\left(\frac{3UH_s+c}{H_s^3}\right)dx+\frac{4}{3}H_s^2(2\alpha_1)\left(\frac{3UH_s+c}{H_s^3}\right)^2$$
$$+2(2\alpha_1)\left(\frac{3UH_s+c}{H_s^3}\right)\left(\frac{-(4UH_s+c)}{H_s^2}\right)H_s \tag{*}$$
$$+\frac{3\alpha_1}{2}\left(\frac{-(4UH_s+c)}{H_s^2}\right)^2+2U\left(\frac{3UH_s+c}{H_s^3}\right)\alpha_1+d=0$$

$$d=2\alpha_0 M-\frac{8\alpha_1}{3}\left(\frac{3U}{H_s}+\frac{c}{H_s^2}\right)^2$$
$$+4\alpha_1\left(\frac{3U}{H_s^2}+\frac{c}{H_s^3}\right)\left(4U+\frac{c}{H_s}\right) \tag{16}$$
$$-\frac{3\alpha_1}{2}\left(\frac{4U}{H_s}+\frac{c}{H_s^2}\right)^2-2U\alpha_1\left(\frac{3U}{H_s^2}+\frac{c}{H_s^3}\right)$$

where $M=\left[\frac{3ULm_1}{2\pi h_2^2}+\frac{Lcm_2}{6\pi h_2^3}\right]$,

$$m_1=\frac{\pi(L-x)}{L}+\sin\frac{\pi(L-x)}{L},$$

$$m_2=\sin 3\left(\frac{\pi(L-x)}{2L}\right)+9\sin\left(\frac{\pi(L-x)}{2L}\right)$$ Now,

At $x=L$,

$\Rightarrow \quad M=0$

$H_s=h_2$ and $M=0$ in (16)

Using the boundary conditions,

$$d=-\frac{8\alpha_1}{3}\left(\frac{3U}{h_2}+\frac{c}{h_2^2}\right)^2+4\alpha_1\left(\frac{3U}{h_2^2}+\frac{c}{h_2^3}\right)\left(4U+\frac{c}{h_2}\right) \tag{17}$$
$$-\frac{3\alpha_1}{2}\left(\frac{4U}{h_2}+\frac{c}{h_2^2}\right)^2-2U\alpha_1\left(\frac{3U}{h_2^2}+\frac{c}{h_2^3}\right)$$

Then,

$$d=2\alpha_0\left(\frac{a_0}{h_2^2}+\frac{a_1c}{h_2^3}\right)-\frac{8\alpha_1}{3}\left(\frac{3U}{h_2a_2}+\frac{c}{h_2^2a_2^2}\right)^2$$
$$+4\alpha_1\left(\frac{3U}{h_2^2a_2^2}+\frac{c}{h_2^3a_2^3}\right)\left(4U+\frac{c}{h_2a_2}\right)$$
$$-\frac{3\alpha_1}{2}\left(\frac{4U}{h_2a_2}+\frac{c}{h_2^2a_2^2}\right)^2-2U\alpha_1\left(\frac{3U}{h_2^2a_2^2}+\frac{c}{h_2^3a_2^3}\right) \tag{18}$$

where $a_0=\frac{3UL}{2\pi}\left(\frac{\pi}{L}(L-a)+\frac{\sin\pi}{L}(L-a)\right)$,

$$a_1=\frac{L}{6\pi}\left[\sin 3\left(\frac{\pi(L-a)}{2L}\right)+9\sin\left(\frac{\pi(L-a)}{2L}\right)\right],$$

$$a_2=\sec\left\{\frac{\pi(L-a)}{2L}\right\}$$

From (17) and (18)

$$\frac{-c^2k}{6h_2^4U}\left(\frac{1}{a_2^4}-1\right)+\frac{c}{h_2^3}\left[\frac{2ka_1\alpha_0}{\alpha_1U}-10k\left(\frac{1}{a_2^3}-1\right)\right]$$
$$+\frac{U^2}{h_2^2}\left[\frac{6k}{U}\left(\frac{1}{a_2^2}-1\right)\right]+\frac{2a_0k\alpha_0}{\alpha_1Uh_2^2}=0 \tag{19}$$
$$\Rightarrow\frac{-c^2k}{6h_2^2U}\left(\frac{1}{a_2^4}-1\right)+\frac{c}{h_2}\left[\frac{2ka_1\alpha_0}{\alpha_1U}-10k\left(\frac{1}{a_2^3}-1\right)\right]$$
$$+U^2\left[\frac{6k}{U}\left(\frac{1}{a_2^2}-1\right)\right]+\frac{2a_0k\alpha_0}{\alpha_1U}=0$$

Let $k=\frac{\alpha_1U}{\alpha_0L}$ in (19)

Hence, $A_1c^2+A_2c+A_3=0$

$$A_1=\frac{-k}{6h_2^2U}\left(\frac{1}{a_2^4}-1\right);A_2=\frac{1}{h_2}\left[\frac{2ka_1\alpha_0}{\alpha_1U}-10k\left(\frac{1}{a_2^3}-1\right)\right];$$

$$A_3 = \left[\frac{6k}{U}\left(\frac{1}{a_2^2}-1\right)\right]; A_4 = \frac{2a_0 k\alpha_0}{\alpha_1 U}$$

$$A_1 = -\frac{a_3}{h_2^2};\ A_2 = \frac{a_4}{h_2};\ A_3 = a_5$$

where

$$a_3 = \frac{k}{6U}\left(\frac{1}{a_2^4}-1\right); a_4 = \left[\frac{2ka_1\alpha_0}{\alpha_1 U} - 10k\left(\frac{1}{a_2^3}-1\right)\right];$$

$$a_5 = \left[\frac{6k}{U}\left(\frac{1}{a_2^2}-1\right)\right]$$

$$c = \frac{-A_2 + \sqrt{A_2^2 - 4A_1A_3}}{2A_1}$$

$$c = h_2 A_5 \ where\ A_5 = \frac{a_4 + \sqrt{\left(\frac{a_4}{h_2}\right)^2 + 4\left(\frac{a_3}{h_2^2}\right)a_5}}{2a_3}$$

Hence,

$$p = -2\alpha_0\left[\frac{3Um_1L}{2\pi h_2^2} + \frac{Lcm_2}{6\pi h_2^3}\right] + \frac{\alpha_1}{6}\left(\frac{c^2}{H_s^4}\right)$$
$$+\frac{2U\alpha_1}{H_s}\left(\frac{3U}{H_s}+\frac{c}{H_s^2}\right) + \frac{\alpha_2}{3}\left[\begin{array}{l} 4\left(\frac{3U}{H_s}+\frac{c}{H_s^2}\right)^2 \\ -6\left(\frac{3U}{H_s}+\frac{c}{H_s^2}\right)\left(\frac{4U}{H_s}+\frac{c}{H_s^2}\right) \\ +3\left(\frac{4U}{H_s}+\frac{c}{H_s^2}\right)\end{array}\right]$$
$$+d - \frac{8\alpha_1}{3}\left(\frac{3U}{h_2}+\frac{c}{h_2^2}\right)^2 + 4\alpha_1\left(\frac{3U}{h_2^2}+\frac{c}{h_2^3}\right)\left(4U+\frac{c}{h_2}\right)$$
$$-\frac{3\alpha_1}{2}\left(\frac{4U}{h_2}+\frac{c}{h_2^2}\right)^2 - 2U\alpha_1\left(\frac{3U}{h_2^2}+\frac{c}{h_2^3}\right) \quad (20)$$

The Non-dimensionless pressure is,

$$p^* = \frac{ph_1^2}{\alpha_0 UL}$$

The Non-dimensional pressure p^* is estimated for the second-order fluids A (Osteoarthritic fluid, α_0 = 2.5 Nsm^{-2}, α_1 =-0.025 Ns^{2}m^{-2}, α_2 =0.05 Ns^{2}m^{-2}), B(Polyisobutylene (5.39%), α_0 = 18.5 Nsm^{-2}, α_1 =-0.3 Ns^{2}m^{-2}, α_2 =1.2 Ns^{2}m^{-2}) and C(Polyisobutylene (5.4%), α_0 = 18.5 Nsm^{-2}, α_1 =-0.2 Ns^{2}m^{-2}, α_2 =1 Ns^{2}m^{-2}) with material parameters $\alpha_0, \alpha_1, \alpha_2$ for the fluids A, B, C respectively. Figure-2 indicates the variation of Non-dimensional pressure p^* and x^* for the second order fluids A, B, C.

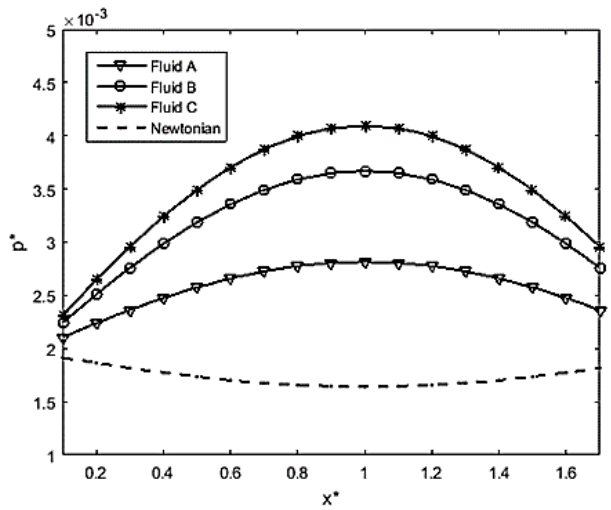

Figure-2. Variation of non - dimensional pressure p* with x* for different values of α_0, α_1 and α_2 with U=0.004 m/s and L=0.05m.

CONCLUSIONS

The performance characteristic of a secant slider bearing is analysed. It is evident that the Non-dimensionless pressure p^* is more for the second-order fluids when compared to Newtonian fluid. The results reveal that second order fluids enhances the lubrication effects of machinery when coupled to Newtonian fluid.

NOMENCLATURE

$\alpha_0, \alpha_1, \alpha_2$	Material constants.
L	Length of the bearing.
U	Velocity of slider.
h_1	Minimum film thickness.
h_2	Maximum film thickness.
h_2^*	Film thickness ratio. $h_2^* = \frac{h_2}{h_1}$
p	pressure in the film
p^*	Non-dimensional pressure.
H_s	Secant slider bearing.
c	coefficient of friction.

REFERENCES

[1] B. D. Coleman and W. A. Noll. 1960. An approximation theorem for functionals, with applications in continuum mechanics. Archive for Rational Mechanics and Analysis. 6(1): 355-370.

[2] N. M. Bujurke. 1982. Slider bearings lubricated by a second-grade fluid with reference to synovial joints. Wear. 78(3): 355-363.

[3] W. G. Sawyer and J. A. Tichy. 1998. Non-Newtonian lubrication with the second-order fluid. Journal of Tribology. 120(3): 622-628.

[4] Z. Li, P. Huang, y. Meng and S. Wen. 2001. Study on hydrodynamic lubrication with second-order fluid (II). Science in China.

[5] Sudha V, Sundarammal kesavan, Ramamurhy V. 2008. Squeeze film characteristics of couple stress fluid between porous Triangular plates. Journal of Manufacturing Engineering. 3(1).

[6] Rajesh C. Shah and Nayen I. Patel. 2012. Mathematical Modelling of slider bearing of various shapes with combined effects of porosity at both the ends, anisotropic permeability, slip velocity, and squeeze velocity. American Journal of computational and Applied Mathematics. 2(3): 94-100.

[7] Li-Ming Chu, Hsiang-Chen Hsu and Jiann-Lin Chen. 2014. An analytical approach for analysis of slider bearings with Non-Newtonian Lubricants. Hindawi.

[8] Siddangouda Apparao, Trimbak Vaijanath Biradar and Neminath Bhujappa Naduvinamani. 2014. Non-Newtonian Effects of Second-Order Fluids on the Hydrodynamic Lubrication of Inclined Slider Bearings. Hindawi.

[9] S. Rushma and K. Ramakrishna Prasad. 2015. Effects of velocity slip and viscosity variation in slider bearings with two layer lubricant. International Journal of Scientific and Engineering Research. 6(9): 161-166.

[10] S.Sampathraj, Sundarammalkesavan and V. Sudha. 2016. Deformation Charateristics of a composite slider bearing. Global Journal of Pure and Applied Mathematics. 12(1).

[11] Thangavelu K, Sampathraj S and Sudha V. 2018. Effects of Viscosity Variation in squeeze film lubrication of circular stepped plates. International Journal of Mathematical Archive. 9(2): 1-11.

[12] S Sampathraj, K Thangavelu and V Sudha. 2018. Effects of slip-velocity and viscosity variation in squeeze film lubrication of triangular plates. International Journal of Statistics and Applied Mathematics. 3(4): 16-26.