VOL. 15, NO. 8, APRIL 2020 ISSN 1819-6608
ARPN Journal of Engineering and Applied Sciences

www.arpnjournals.com

EXPERIMENTAL SILO CONTROLLED BY PROGRAMMABLE LOGIC CONTROLLER - PLC

Faiber Robayo Betancourt[1], Gilma Paola Andrade Trujillo[2] and Angelo A. Reyes Carvajal[2]
[1]Department of Electronic Engineering, Faculty of Engineering, Surcolombiana University, Neiva, Huila, Colombia
[2]School of Basic Sciences, Technology and Engineering, National Open and Distance University, Bogotá, Colombia
E-Mail: faiber.robayo@usco.edu.co

ABSTRACT

This work presents the design and implementation of an experimental silo controlled by a PLC (Programmable Logic Controller). The main contribution of this work is to provide a new tool in the control area and industrial instrumentation applied to a silo. A variety of sensors, motors, and electromechanical elements are implemented. The structure is metallic and consists of a conveyor belt made of rollers through which a grain container is moved. The PLC configuration and programming were executed by the Connected Components Workbench (CCW) software and the graphical interface was performed in LabVIEW programming. As a result, an experimental tool for the industrial process automation practice applied to silo was developed.

Keywords: PLC, silo, sensors, LabVIEW, conveyor belt.

1. INTRODUCTION

Nowadays, the automation processes are becoming more important on an industrial level due to its great advantages such as time reduction in the development of tasks or also that it allows to carry-out tasks in environmental conditions where an operator cannot access. In order to carry out industrial processes, it has been necessary to use specialized instruments for the control of variables. The first controls were manually operated by workers, but today there are programmable logic controllers that facilitate the control and handling of variables to meet the requirements and have controlled environments where monitoring is done from a control room. With the advent of the PLC to the industry, the control of variables was simpler. The PLC is a device that allows a sequential control of the entire process through the programming Ladder (Villalobos and Figuera, 2014).

In this document, the design and implementation of an experimental silo are explained. Silos are structures designed to store grain and other materials (QuimiNet, 2006). The micro800 series Allen Bradley brand PLC was used to control the packing of grain stored in a silo. The development of this project allows for strengthening the skills and competencies necessary for the management of the PLC and its applications.

2. MATERIALS AND METHODS

In the silo implementation process, the stages shown below are developed.

2.1 Control systems

A control system usually consists of input devices, a controller and output devices. For the experimental silo an open-loop control system is proposed as shown in Figure-1 (Moreno, 2015).

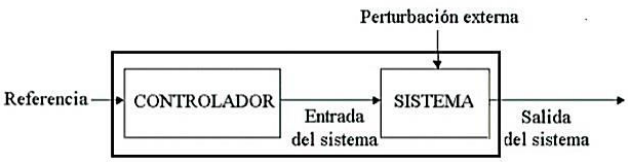

Figure-1. Open loop control system.

In this type of system, the output variables have no effect on the control variables. Open-loop control is used in sequential systems where variables are not regulated, but rather, previously established operations are performed. This type of control system is very suitable when working with PLC.

2.2 Control elements

For the silo control, a PLC is proposed as shown in Figure-2. This electronic device allows the connection of sensors and actuators used for this project. The PLC is a sequential machine that executes programming previously stored by the user in his memory, generating the orders to the silo inputs to perform the operations of the required application. The sequence is executed continuously in order to keep the control updated. The PLC operates first reading the input signals, then the program is processed to obtain the control signals and finally, the orders or control signals are sent to the outputs (UDLAP, 2016).

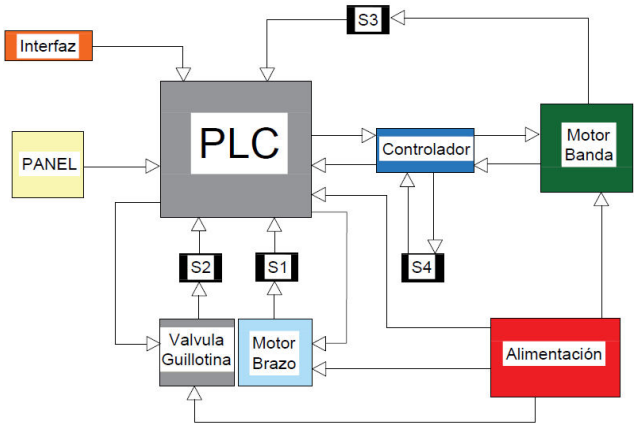

Figure-2. Diagram of the proposed system using PLC.

The controller used for the plant is an Allen-Bradley brand PLC reference is 2080-LC30-16QWB, designed to meet the wide range of stand-alone machine applications. The physical structure of the Micro 830 PLC is shown in Figure-3.

Figure-3. Micro830 PLC physical structure.

Micro830 is a 16-point device, it has 10 inputs and 6 outputs incorporated, with the possibility of 2 expansion modules as shown in Figure-4. The controller is powered from a 24-volt DC source. It is programmed into the Connected Components Workbench software of free distribution. The terminal description of the 16-point Micro830 controller is shown in Table-1.

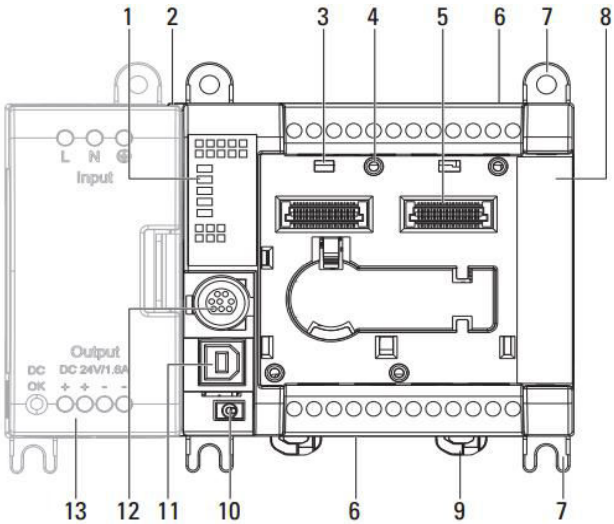

Figure-4. PLC General description.

Table-1. General description.

Number	Description	Number	Description
1	Status indicators	8	Covered right side
2	Optional power supply slot	9	DIN-rail mounting lock
3	Plug-in module safety.	10	Mode switch
4	Plug-in module screw hole.	11	USB Type B Connector Port
5	40-pin high-speed plug-in connector	12	Non-isolated combined RS232/RS485 serial port
6	I/O Terminal Block	13	Optional power supply
7	Mounting screw hole/mounting foot		

2.3 Plant input elements

2.3.1 Sensors

To determine the grain container position on the conveyor belt, an infrared sensor is used. This sensor allows to know when the grain container is located in the silo position so that the PLC stops the conveyor belt and starts filling the grain container. The sensor used is a GP2Y0D810Z0F infrared sensor as shown in Figure-5. It allows a continuous reading and delivers a digital voltage at the measured distance, in a range from 0 cm to 10cm. The device output voltage remains low as long as there is a detection.

Figure-5. Infrared sensor – GP2Y0D810Z0F.

To control the level of grain falling from the silo into the container, an ultrasonic sensor is used. The function of this sensor is to prevent the grain from overflowing and falling out of the container. The sensor used is an ultrasonic sensor HC-SR04 that detects distance in the range from 2 cm to 4 meters as shown in Figure-6.

Figure-6. Ultrasonic sensor HC-SR04.

This ultrasonic sensor acquires the data by using the equations below.

$$centimeters = \frac{\mu s}{58}$$

$$range = \frac{(uptime) * speed(340\, m/s)}{2}$$

Two pushbuttons are used, one for switching on the assembly and the other to stop the process already running as shown in Figure-7a and Figure-7b. A type of switch with multiple positions is used to actuate the different operating modes.

Figure-7. a) Push-button. b) Two-way switch.

2.4 Plant output elements

A conveyor belt is used as the means of transport of the grain container (Alva and Barreto 2014). It is formed by a flexible belt that moves using a DC motor with a high torque gear motor. This motor is solidly assembled, with a torque of 15 Kg.cm. Also, some rollers are adapted to that motor to be able to move the belt.

A mechanical arm is designed and implemented for the input of the container to the conveyor belt. Its structure is driven by a 5 rpm, high torque motor. A two-position electromechanical valve (open-closed) is used for the silo. Solenoid valves are used in a multitude of applications to control the flow of all types of fluids. For this project, a guillotine type valve is implemented as shown in Figure-8.

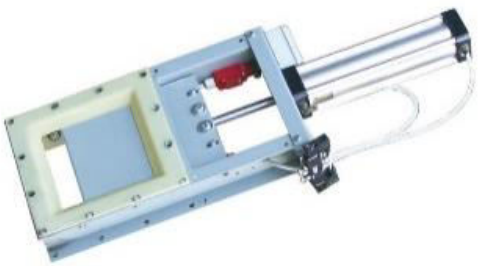

Figure-8. Guillotine-type valve.

Two LED pilot lights are used, the first to indicate that the machine is on and the second to indicate that the container is full after the solenoid valve has been closed as shown in Figure-9.

Figure-9. LED pilot lights.

2.5 PLC – programming and configuration

The configuration and programming of the PLC were done by the Connected Components Workbench (CCW) software. It is a quite complete free distribution program that is in charge of synchronizing the PLC and programming of the Human Machine Interface (HMI) (Santamaria, 2013). The programming languages applied are structured language, ladder diagram and function block diagram (Páez, *et al*., 2015).

2.5.1 Graphic interface

The LabVIEW programming tool is used to implement the control panel. It is based on G programming or graphic programming which allows the agile development of the interface that drives all the processes that the plant performs as shown in Figure-10.

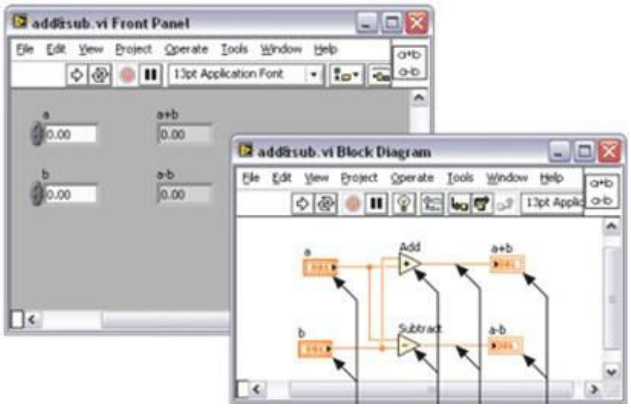

Figure-10. LabVIEW programming environment.

3. RESULTS AND DISCUSSIONS

3.1 Plant structure

As a first step, the design of the structure is proposed in the AutoCAD program as shown in Figure-11.

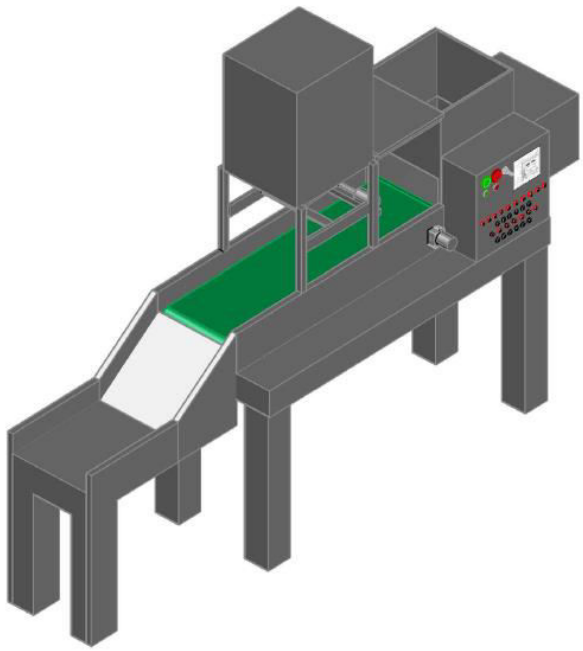

Figure-11. Silo design in AutoCAD.

Once the design of the structure is made, the cut and joint are made by welding the metal sheets, giving them the shape proposed in AutoCAD drawings. The Metal structure of the Silo is shown in Figure-12.

Figure-12. Metal structure of the Silo.

3.2 Control panel description

The control panel and its component connections are shown in Figure-13. Two buttons are located on the upper left side; the green one is marked as "Run" and starts the process. The red one is marked as "Stop" and stops the process at any time. On the right side of the buttons, there is a 2-way switch that sets the operating modes. Just below the buttons, two indicators show the current status (green if the process is running and red if it is stopped). Next are the terminals that indicate the I/O (Inputs/Outputs) of the PLC and silo. The first two rows are exclusively for the PLC and the next two rows (3 and 4) are for the silo.

Figure-13. Control panel finished.

The first row for the PLC represents the 10 inputs available from the Micro830 controller and are numbered from I-00 to I-09. The second row represents the 6 outputs available by the PLC numbered from O-00 to O-05. Figure-14 shows the distribution of the I/O in the controller before connecting them to the terminals.

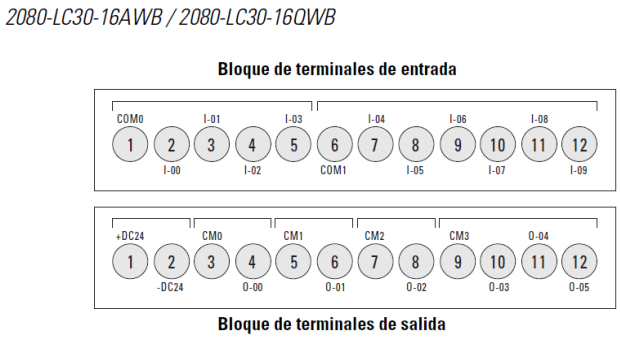

Figure-14. Distribution of inputs and outputs in the PLC.

The third row is for the silo inputs distributed as follows. First is the run switch (sw1); second, the stop switch (sw2); third, the infrared sensor to control the mechanic arm position (S1); fourth, the infrared sensor for the position (S2); fifth, the sensor that controls the opening and closing position of the SILO (S3); sixth, the ultrasonic sensor for the level (S4) and the 2-way switch goes to inputs 7 and 8.

In the fourth row are the connections for the silo outputs and they are distributed as follows: first is the belt motor output (M1), second is the motor that drives the guillotine valve (M2), third is the green indicator light, fourth is the red LED indicator and fifth is the motor of the mechanic arm (M3).

3.3 Additional elements

For the PLC power supply, a 1606-XP30E 24-28V DC at 30W with a current of 1.3A is used, as shown in Figure-15.

Figure-15. Power supply at 24 volts.

Due to the sensors having a power voltage of approximately 5V, the Arduino's voltage source is used. A 12volt voltage regulator with a capacity of 5A is used,

since the motor that moves the conveyor belt requests high current when the conveyor belt starts moving.

Because the PLC has inputs and outputs at 24 volts and devices with different voltage amplitudes are used, coupling circuits from transistorized amplifiers that work in cut and saturation mode are designed as shown in Figure-16.

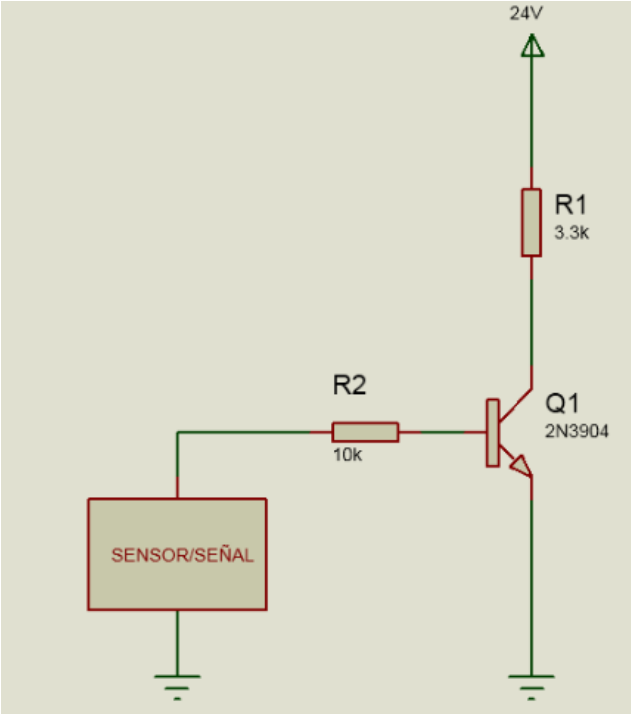

Figure-16. Switching transistor coupling circuits.

3.4 System identification

3.4.1 Data acquisition

The acquisition of the input and output data of the motor of the conveyor belt is done through the Arduino one R3 card and a circuit with encapsulated horseshoe type optocoupler.

3.4.2 Transfer function estimation

The Ident toolbox of Matlab is used to estimate the conveyor belt transfer function. After the data is acquired using LabVIEW, it is exported to IDENT and the identification graphs are generated as shown in Figure-17.

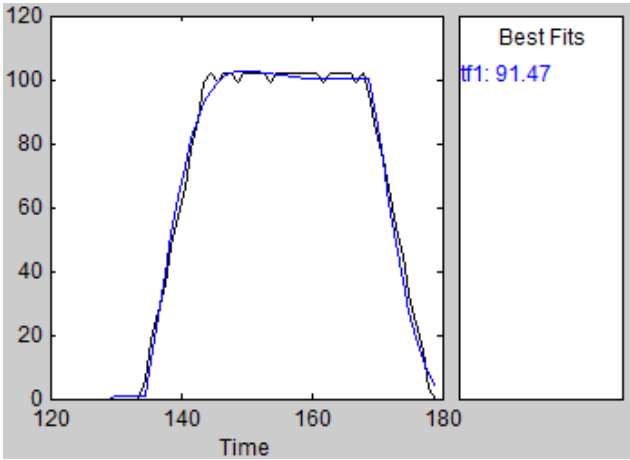

Figure-17. Theme identification

The transfer function obtained through Matlab is:

$$\frac{0.93}{0.148s^2 + 0.94s + 1}$$

3.4.3 PWM control with Arduino

PWM (Pulse Width Modulation) is a technique used to obtain analog results with digital media. This digital control is used to create a square wave, a switching signal between on and off. This on/off pattern can simulate voltages between 0 volts and 5 volts by charging a portion of the signal time. The duration of the "time" is called the pulse width. This type of control is used for conveyor belt control. Since the PLC has no PWM outputs, an Arduino card is used to execute such control (Arduino, 2019). The control programming is done by synchronizing the Arduino with LabVIEW and using the tool called LINX as shown in Figure-18.

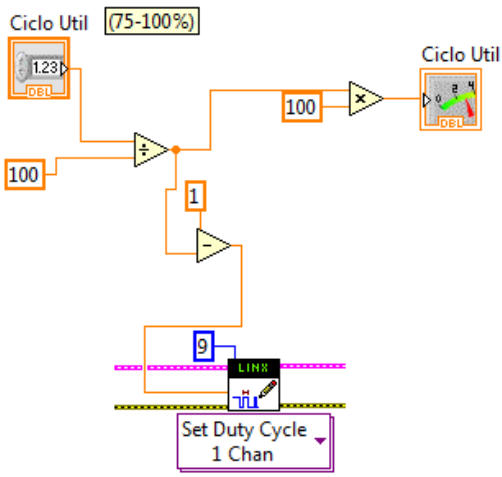

Figure-18. PWM control in LINX.

Because the motor requires higher current than the Arduino can supply, a power stage was implemented to ensure proper operation, as shown in Figure-19. This circuit has the advantage that the Gate voltage reaches the maximum supply voltage ensuring complete saturation of

the MOSFET. The value of the Gate resistor is connected to a positive value that modifies the switching speed of the MOSFET, i.e. high values for slow switching and low values for fast switching.

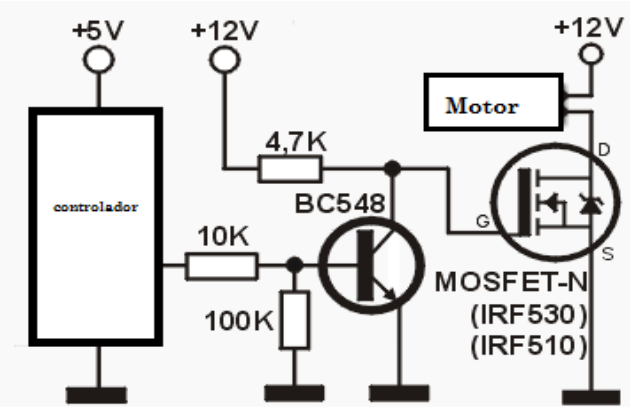

Figure-19. Power stage.

3.5 Programming environments

3.5.1 Connected component worbench

For the controller programming, the Component Connected Workbench (CCW) software is used in version number 8, which provides a set of support tools for micro800 family controllers as shown in Figure-20.

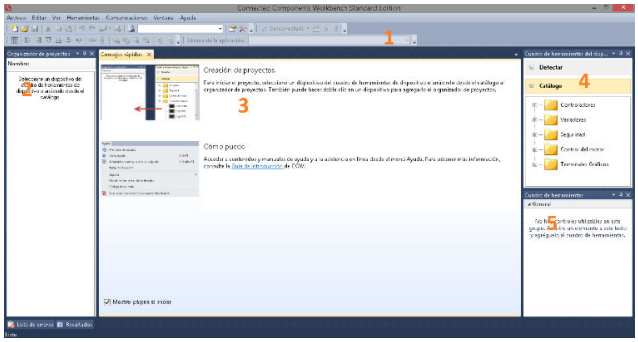

Figure-20. CCW interface.

In Figure 20 the numbers in orange indicate the main interface blocks, which are detailed below:

a) Toolbar: grouping of buttons that facilitate the handling of the software
b) Project organizer: allows project modification
c) Workspace: the place where programming and other related functions are worked on
d) Device toolbox: we select the driver or device we want to program.
e) Toolbox: we can find the different elements to carry out the programming.

3.5.2 MackerHub - LINX

In this project, a free Arduino hardware board and the LabVIEW toolkit called LINX are used. The LINX and the Arduino allow perform the PWM control of the conveyor belt motor and also to monitor the filling level of the grain containers using an analog ultrasonic sensor. The programming blocks are shown below.

Figure-21 shows the PWM control by making the variation of the useful cycle. A duty cycle of 0 equals 0% and a duty cycle of 1 corresponds to 100%.

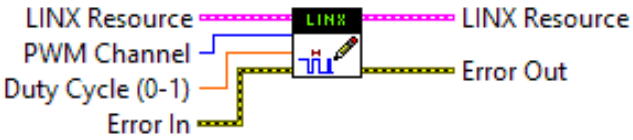

Figure-21. LINX PWM block.

The ultrasonic distance reading sensor HC-SR04 is configured as shown in Figure-22.

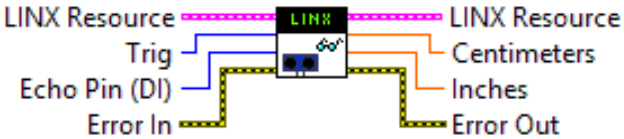

Figure-22. HC-SR04 configuration block.

The start of the connection to the LINX-linked device is shown in Figure-23.

Figure-23. LINX device initialization block.

Connection with LINX-linked local devices is terminated as shown in Figure-24.

Figure-24. LINX device termination block.

4. CONCLUSIONS

A tool for the practice of industrial process automation applied to silos was developed. A variety of sensors, motors, and electromechanical elements were implemented. The structure is metallic and consists of a conveyor belt made of rollers and a conveyor belt.

The PLC is an ideal device for the automation of industrial processes, due to its ease of programming and its robustness. In this project, the PLC provides reliability in the task execution.

The choice of different elements that make up the experimental silo allows the development of skills in the field of industrial automation to obtain the most optimal result, meeting the objectives required in the application.

It was necessary to select a communication protocol that allows the computer connection with the controller, to carry out the monitoring and execution of some variables through the PLC. For the specific case of the silo, the

"Modbus RTU" protocol was used to link the logic controller with the Virtual panel.

Due to the importance of monitoring and visualizing in real-time the process being executed, it was necessary to implement a Human Machine Interface (HMI). For this specific project, a graphic programming environment was used through a Virtual HMI Panel.

REFERENCES

Alva J. y Barreto V. 2014. Control y supervisión de llenado de botellas con PLC S7-1200 y LabVIEW. (Tesis pregrado). Trujillo, Perú.

Arduino. 2019. ARDUINO. Obtenido de https://www.Arduino.cc/en/Guide/Introduction

Moreno M. 2015. Consultado el 10 de diciembre de 2015. Disponible en http://datateca.unad.edu.co/contenidos/299013/Manual061ControladorLgicoProgramablePLC.pdf

Páez H., Zamora R., Bohórquez J. 2015. Programación de Controladores Lógicos (PLC) mediante Ladder y Lenguaje de Control Estructura-do (SCL) en MATLAB. Revista Facultad De Ingeniería. 24(39): 109-119.

QuimiNet. 2006. Consultado el 25 de octubre de 2018). Disponible en http://www.quiminet.com/articulos/los-silos-para-almacenaje-16412.htm

Santamaría M. 2013. Diseño e implementación de un sistema de pesaje mediante un panel SI-MATIC HMI y un PLC S7-300, CPU 315-2 PN /DP para 3 silos de materia prima en la empresa Millpolímeros. (Tesis pregrado). Latacunga, Ecuador.

UDLAP. 2016. Controlador Lógico Programable. Universidad de las Américas Puebla. Consultado 15 de marzo de 2018. Disponible es http://catarina.udlap.mx/u_dl_a/tales/documentos/lmt/maza_c_ac/capitulo4.pdf

Villalobos V. y Figuera J. 2014. Programación de PLC's: Lenguaje escalera (LADDER). Seminario Instrumentación y Control Industrial. Universidad de Oriente. Venezuela.