VOL. 16, NO. 8, APRIL 2021 ISSN 1819-6608
ARPN Journal of Engineering and Applied Sciences

www.arpnjournals.com

ADAPTIVE CONTROL SYSTEM FOR TWO-MOTOR ELECTRIC DRIVE OF HEAVY OBJECT ROTATION MECHANISM

Pavel Petrov, Viktor Ivel, Yuliya Gerasimova, Alexander Kashevkin and Sayat Moldakhmetov
M. Kozybayev North-Kazakhstan University, Petropavlovsk, Kazakhstan
E-Mail: sayatmoldakhmetov@gmail.com

ABSTRACT

The article highlights the principle of creating a control system for a two-motor asynchronous electric drive. The principle is based on the identification of the electromechanical time constant of each motor. Based on this, the adjustment of the number of revolutions of the “slave” electric drive to the number of revolutions of the “master” electric drive is achieved. The developed experimental unit for rotating a large object consists of the following elements: a rotation frame, a two-motor electric drive, a control board based on an ATmega2560 microcontroller, digital highly precise angular movement sensors, as well as power converters and reducing gearboxes. The obtained result of time of the transition process of synchronization of speeds satisfies theoretical calculations but requires optimization for real industrial facilities.

Keywords: two-motor electric drive, ATmega2560, speed control, object rotation control system, asynchronous motor.

INTRODUCTION

The systems of two-motor asynchronous electric drives are quite common for industrial facilities. These systems can be used in conveying units, elevator systems or large objects rotation systems. In the works [1, 2] mathematical descriptions of these systems are presented.

Nowadays, there are quite a large number of ways to control and synchronize the speeds of two-motor electric drive based on the operation of asynchronous machines. In the works [3, 4], such method is considered based on sensorless control systems. This method is based on a mathematical model of actuating mechanism (electric motor). Such method is rather complicated, because it is based on determining rotor speeds on the basis of a system of differential equations.

A sensor for determining the angular velocity of the rotor of the "master" electric drive is used in the work [5]. The rotor speed of the "slave" electric drive is controlled based on the measured rotor speed of the “master” electric drive. This method is quite convenient but complicated by the fact that it takes more time to synchronize the speeds of rotors of the two-motor system. This leads to the fact that the transition process of stabilization of speeds becomes large.

There is a third way to control the rotor speeds of the two-motor asynchronous electric drive [6]. This method is also based on the principle of synchronization of two asynchronous motors according to the "master"-"slave" system. However, this system has insufficient speed and does not allow precise synchronization of the number of rotor revolutions in the two motors. This happens due to the lack of precision digital sensors for the angular displacement of the rotors of both motors.

Thus, there is a need to develop an adaptive system for asynchronous two-motor electric drive. The basis of the method being developed is laid in additional blocks for speed regulation and synchronization. Also, the developed system will use the method of the reference model of an asynchronous electric drive. A similar method is considered in the work [7].

THEORETICAL PART

Figure-1 shows a functional block diagram of the developed adaptive control system for a two-motor electric drive of the rotation mechanism intended for large objects. The analysis of the operation of this system was given by the authors in the work [8].

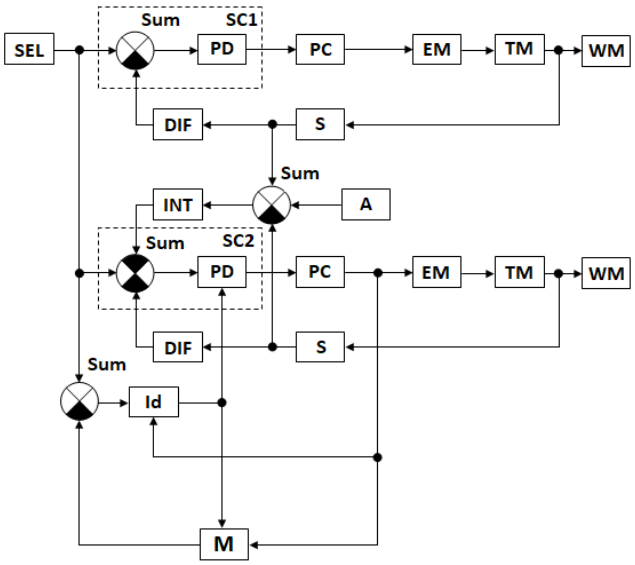

Figure-1. Functional block diagram of the adaptive system of a two-motor electric drive.

The following abbreviations appear in the above diagram:

SEL - general speed selector of two electric drives;
SC1,2 - speed control systems for two electric drives;
Sum - summators;
PD - proportional-differentiating elements;
PC - power converters;
EM - asynchronous electric motors;
TM - transfer mechanisms (gear reducer);
WM - working mechanisms (first and second rotor);
S - precision angular displacement sensors;
DIF - differentiators;

A - angular displacement adjuster;
INT - integrator;
Id - identifier of the mathematical model of the asynchronous electric drive;
M - mathematical reference model of the asynchronous electric drive.

The operation of this functional diagram is based on the following algorithm. The objects of control are two interconnected electric motors, one of which is "master", the other is "slave". The speeds of the first and the second rotor are set by a general speed selector at the system input. Precision sensors are fixed to both rotors and measure their angular movements. Differentiators act as converters of angular displacement to angular velocities. The measured angular velocities are subtracted from the program specified input velocity. This allows calculating the speed deviation of the first and the second rotor. Based on these deviations, the speeds of both electric motors are corrected by proportional-differentiating units.

After passing through the power semiconductor converters, the deviation signals are sent to each electric motor. The rotation of the output shafts is transmitted by means of gear reducers to the rotors of each electric motor. The exact synchronization of the number of revolutions of the rotors of both electric motors is ensured by the angular displacement adjuster. When rotating large objects, this ratio is set to 0 in order to eliminate additional dynamic loads. Also, an adder unit is introduced into the system, which calculates the difference in the angles of rotation of both rotors and a given value:

$$\varphi = \varphi_1 - \varphi_2 - \varphi_{gv}. \quad (1)$$

The signal at the output of the angular displacement selector is integrated and then sent to another adder unit, which is a part of the regulator of the second electric drive. Thus, a negative corrective feedback is realized based on the difference in angular displacements of the first and the second rotors. The operation of these units maintains high accuracy while regulating the given deviation of the rotor angle of the "slave" electric motor.

The introduction of additional blocks of identification and adaptation makes it possible to increase the speed of transient processes and the accuracy of control in steady modes. The relationship between the supply voltage (output of the correcting element) U and the rotor speed ω can be represented by the following linearized differential equation:

$$T_{ED}\frac{d\omega}{dt} - \omega = kU, \quad (2)$$

where T_{ED} - electromechanical time constant of electric drive (identification parameter), U - control voltage (PWM-signal), ω - angular velocity of rotor of electric motor, k - proportional gain (determined experimentally).

With the help of transformations, the transfer function of each electric drive as a control object can be represented as follows:

$$W_{ED}(p) = \frac{k}{T_{ED}p+1}, \quad (3)$$

where $p = \frac{d}{dt}$ – Laplace differential operator.

In this case it is necessary to achieve compensation for the response rate of each electric drive. For this, the correcting elements are chosen precisely proportional differentiating. These elements are determined by the following transfer function:

$$W_K(p) = T_K p + 1, \quad (4)$$

where $T_K = T_{ED}$.

This adaptive two-motor system provides automatic setting for T_K parameter. The setting is carried out in the transfer function (4) using mathematical models of electric drives and an identification block. The mathematical model used in Figure 1 is expression (3).

Obviously, it is necessary to identify the T_K parameter of the electromechanical time constant. This parameter is further required to adjust it to the similar T_{ED} parameter. All this will allow you to change the transfer function of the proportional-differentiating element (4). Thus, the approximation of the transfer function of the control system to the proportional element is reached with sufficient reliability. Further, this will allow accurate synchronization of two electric motors and increase the speed of the system.

EXPERIMENTAL RESULTS

Functional block diagram (Figure-1) can be implemented in MATLAB program. Similar Simulink-models were presented in the works [9,10]. Figure-2 shows a computer model that fully describes the above algorithm.

In Figure-2, proportional-differentiating blocks are implemented by the elements gain1, derivate and gain2, derivate1. 10 - proportional gain of the gain block of integrated difference of the angular displacement (chosen experimentally). Speed reference - general speed selector. Load torque and load torque1 - electromechanical torque selector for both electric drives. With the use of Scope and Scope2 blocks, the oscillograms of changes in the number of revolutions of the RPM rotors and the load torque M can be observed. Space Vector PWM - subsystems of speed controllers based on the identification of the electromechanical time constant of each electric drive (Figure-3).

ARPN Journal of Engineering and Applied Sciences

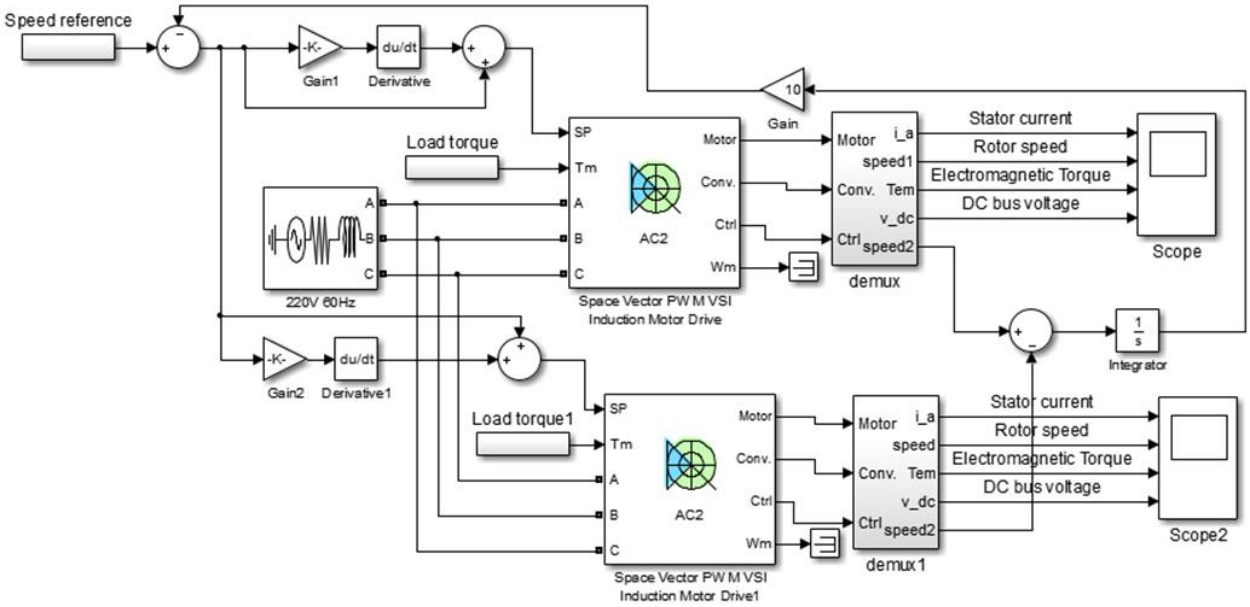

Figure-2. Twin motor electric drive system with corrective feedback based on proportional-differentiating elements.

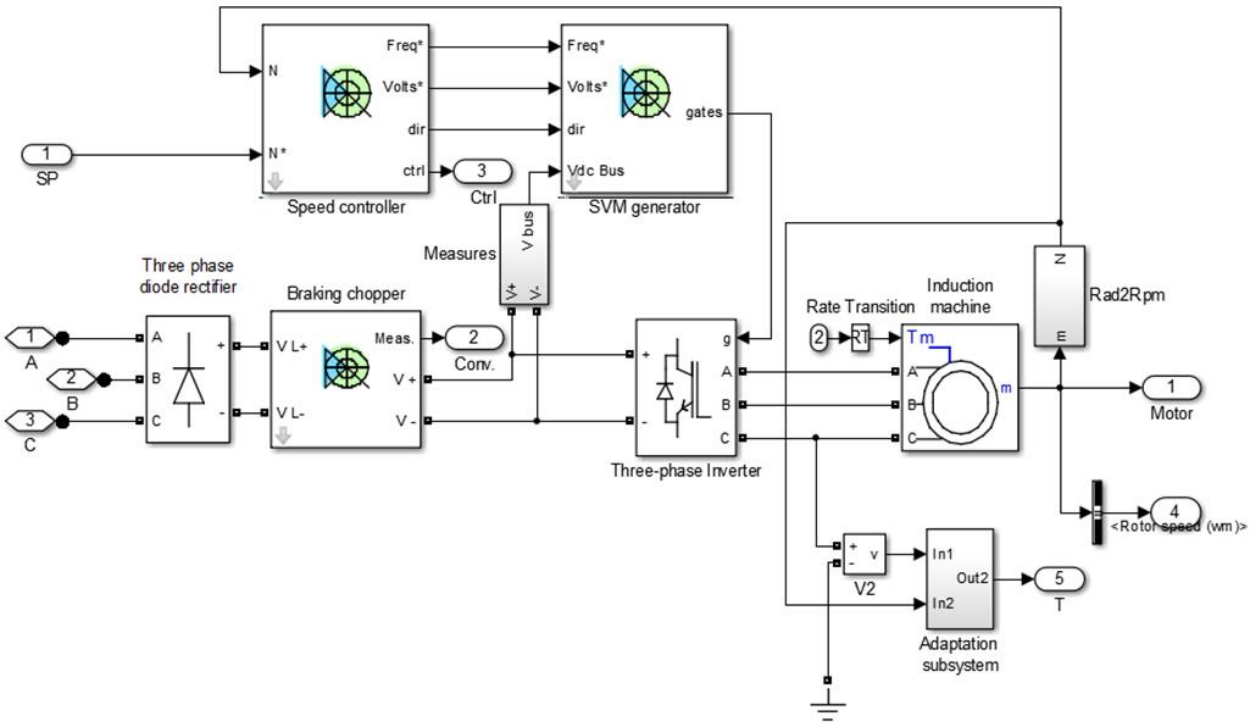

Figure-3. Subsystem of speed controller identical for both electric drives.

The speed control method in this case is based on space-vector modulation. This method is considered in the work [11]. This method is based on the generation of voltage vectors for switching a semiconductor three-phase inverter. From the output of the inverter, the control signal goes to the motor windings (induction machine). In Figure-3, the adaptation subsystem gives the possibility to determine the electromechanical time constant of each electric drive and use it in setting up the mathematical model of electric motors in expression (3).

In Figure-3, the identification subsystem is integrated into the speed controller subsystem of each drive. Single-phase supply voltage of the electric motor is supplied to the input In1, and the number of revolutions of the rotor of the electric motor is supplied to the input In2. Electromechanical time constant of the electric drive T is an output parameter.

Computer models in Figures 2 and 3 can be used as a graphical program code for 8-bit microcontroller ATmega2560. This microcontroller is equipped with built-in 10-bit analog-to-digital converter and 54 digital inputs-

outputs. This architecture makes it possible to implement this speed control algorithm, i.e. the microcontroller will control the system, and the control elements are two interconnected asynchronous electric motors. The Arduino Mega 2560 board can be used as a control module, which supports communication with MATLAB. Arduino Mega 2560 board can be used as a control object with a downloaded Simulink-model. This approach is based on the possibility of MATLAB to interpret a graphic code into C++ language. This approach was implemented in the work [12].

LIR-390A were used as precision sensors of angular displacement in the project. These sensors are optical incremental encoders. The appearance of LIR-390A is shown in Figure-4.

The developed test stand for the experiment is a synthesis of the following elements: Arduino Mega 2560 board as a process controller fixed on the both rotors of the encoders, power converters, reducing gearboxes and a rotating frame for fixing the object of rotation. The developed test stand is shown in Figure-5.

Figure-4. Appearance of LIR-390A sensor.

The program in the form of Simulink-model is compiled to the Arduino Mega 2560 hardware platform. The electric motors are powered by a separate 220V unit with a semiconductor frequency converter. The control can be carried out both from a personal computer (for entering the values of the initial speed and the initial load torque), and autonomously. Low-power (20 kW) asynchronous motors 4AX80A4Y3 are selected as experimental electric motors. These electric motors make it possible to implement the power efficient mode.

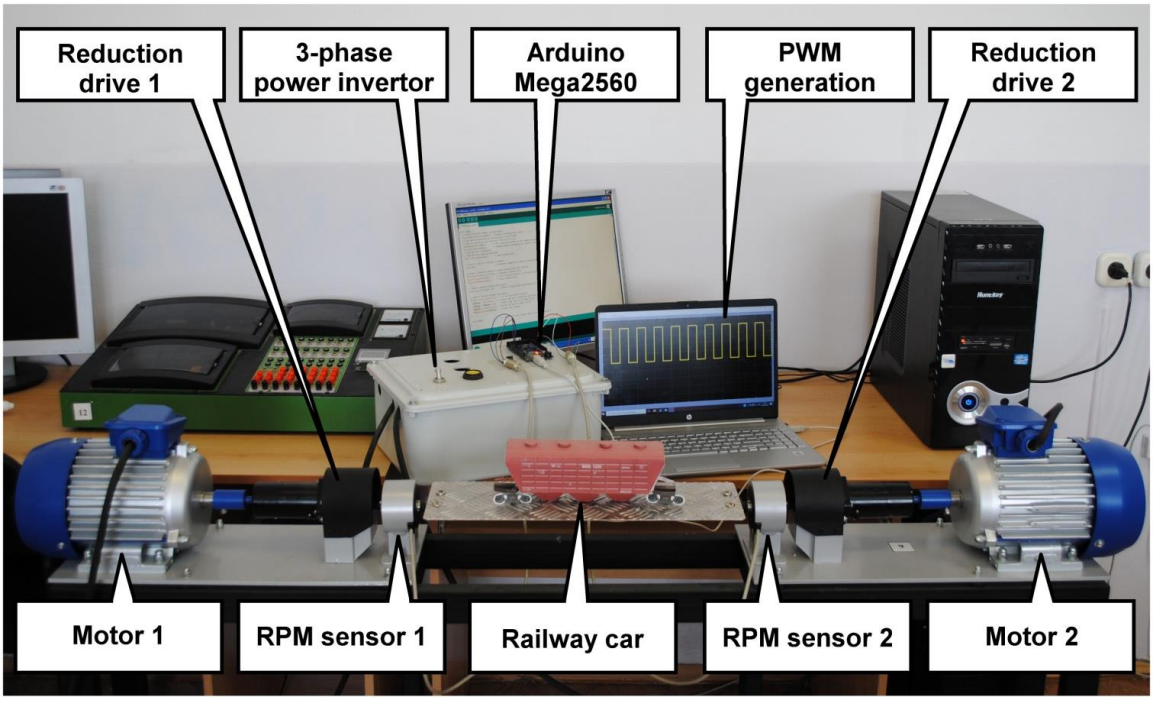

Figure-5. Stand with wagons in a different perspective.

Figures 6 and 7 show the simulation results for a two-motor electric drive with a subsystem for identifying the electromechanical time constant T and a subsystem for adapting to the changing parameters of the electromechanical system. Oscillograms are made from Scope and Scope 2 blocks in Figure-2.

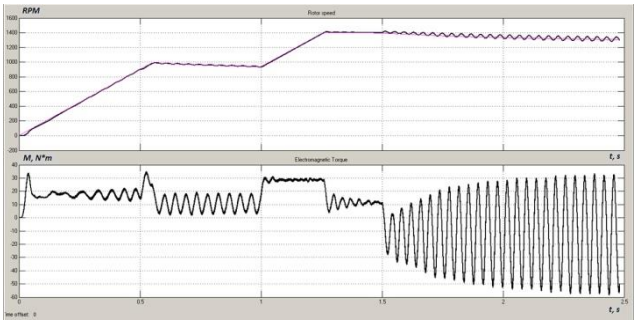

Figure-6. Simulation results of performance of the "master" electric motor in the adaptive control system.

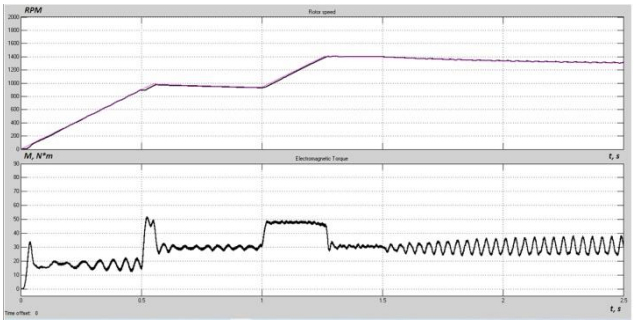

Figure-7. Simulation results of performance of the "slave" electric motor in the adaptive control system.

As you can see in Figures 6 and 7, the transient time (final synchronization of the number of revolutions of both rotors, approximately 1390 revolutions per minute) is about 2 seconds. This result is obtained due to the fact that the MATLAB program (when controlled from a computer) refers to a large number of data packets and drivers that slows down the system. In this case, the changes in the electromagnetic dynamic moment on the "master" electric drive are recorded, which can lead to an overload of the entire system. This can cause a turnover of the object being rotated. To increase the speed of the system and eliminate fluctuations in the electromagnetic torque, it is planned to use a more powerful microprocessors with a 12-bit analog-to-digital converter as a control unit in the future.

CONCLUSIONS

The theoretical calculations presented in the article have been confirmed experimentally. It has been proven that for effective synchronization of the speeds and the number of revolutions of the rotors of two interconnected electric motors, it is necessary to identify the electromechanical time constant of both electric drives. This parameter is further used as a variable in the mathematical model of an asynchronous motor. This approach makes it possible to determine the deviation between both rotors and achieve a relatively fast transient synchronization of the speeds of both asynchronous motors.

ATmega2560 microcontroller does not allow achieving the required speed (0.5 - 0.6 seconds) to synchronize the number of revolutions of two rotors in a two-motor system. ATMega2560 10-bit analog-to-digit converter does not provide highly accurate measurement of the angular displacement of the two rotors. To optimize the operation of the control system for a two-motor asynchronous electric drive, it is worth using the SAM3X8E ARM Cortex-M3 microprocessor with a 12-bit analog-to-digit converter available. The system simulation results based on SAM3X8E ARM Cortex-M3 were reviewed by the authors in the article [8].

REFERENCES

[1] G. Odnokopylov, Y. N. Dementev, I. V. Usachev, D. Y. Lyapunov and A. S. Petrusev. 2015. Load balancing of two-motor asynchronous electric drive. International Siberian Conference on Control and Communications (SIBCON). pp. 1-4. doi: 10.1109/SIBCON.2015.7147249.

[2] A. Morozov, N. Dobroskok, V. Lavrinovskiy and O. Mokhova. 2017. Stability analysis of mechanical coupled two-motor asynchronous electric drive. IEEE Conference of Russian Young Researchers in Electrical and Electronic Engineering (EIConRus)., pp. 953-957. doi: 10.1109/EIConRus.2017.7910714.

[3] H. Setiana, F. Husnayain and F. Yusivar. 2019. Speed Sensorless Control of Dual Induction Motor using Direct Torque Control - Space Vector Modulation. IEEE 2nd International Conference on Power and Energy Applications (ICPEA). pp. 110-114. doi: 10.1109/ICPEA.2019.8818504.

[4] A. Boulmane, Y. Zıdanı, D Belkhayat and M Bouchouırbat. 2020. A GA-based adaptive mechanism for sensorless vector control of induction motor drives for urban electric vehicles. Turkish Journal of Electrical Engineering and Computer Science. 28(3): 1731-1746. doi: 10.3906/elk-1910-39

[5] B. A. Negrea, I. I. Incze, M. Imecs, A. V. Pop and C. Szabo. 2012. An improved speed identification method using incremental encoder in electric drives. Proceedings of 2012 IEEE International Conference on Automation, Quality and Testing, Robotics. pp. 536-540. doi: 10.1109/AQTR.2012.6237769.

[6] Hingmire and B. B. Pimple. 2018. Simulation and Analysis Studies of Speed Control of Brushless DC Motor Using Hall Sensors. International Conference on Smart Electric Drives and Power System

(ICSEDPS). pp. 384-387. doi: 10.1109/ICSEDPS.2018.8536062.

[7] Pavlitov, H. Chen, Y. Gorbounov,T. Tashev, T. Georgiev and W. Xing. 2010. Switched Reluctance Motor Torque Ripples Reduction by the Aid Of Adaptive Reference Model. International Symposium on Power Electronics, Electrical Drives, Automation and Motion (SPEEDAM). pp. 1276-1279. doi: 10.1109/SPEEDAM.2010.5544899.

[8] P. Petrov, V. Ivel, Y. Gerasimova and S. Moldakhmetov. 2018. System of lifting and rotation of railway cars. ARPN Journal of Engineering and Applied Sciences. 13(2): 714-717.

[9] Tao Zhao and Qunjing Wang. 2005. Application of MATLAB/SIMULINK and PSPICE simulation in teaching power electronics and electric drive system. International Conference on Electrical Machines and Systems. 3: 2037-2041. doi: 10.1109/ICEMS.2005.202919.

[10] G. Szabó, K. Veszprémi and I. Schmidt. 2017. MATLAB and Simulink-based controlled electric drive software development. International Young Engineers Forum (YEF-ECE). pp. 79-84. doi: 10.1109/YEF-ECE.2017.7935645.

[11] Kumar M. Satheesh, Babu P. Ramesh and S. Ramprasath. 2012. Four Quadrant Operation of Direct Torque Control-SVPWM based three phase Induction Motor Drive in MATLAB/Simulink environment. IEEE International Conference on Advanced Communication Control and Computing Technologies (ICACCCT). pp. 397-402. doi: 10.1109/ICACCCT.2012.6320810.

[12] Z. Adel, A. A. Hamou and S. Abdellatif. 2018. Design of Real-time PID tracking controller using Arduino Mega 2560for a permanent magnet DC motor under real disturbances. International Conference on Electrical Sciences and Technologies in Maghreb (CISTEM). pp. 1-5. doi: 10.1109/CISTEM.2018.8613560.