VOL. 16, NO. 19, OCTOBER 2021 ISSN 1819-6608
ARPN Journal of Engineering and Applied Sciences
©2006-2021 Asian Research Publishing Network (ARPN). All rights reserved.
www.arpnjournals.com

EFFECT OF INITIAL MOISTURE CONTENT OF WHEAT GRAIN ON ITS DRYING TIME IN A ROTARY DRYER

A. Perekopskiy, A. Zakharov, A. Zykov and V. Yunin
Federal Scientific Agricultural Engineering Center VIM, Moscow, Russian Federation
E-Mail: vim_iaep@mail.ru

ABSTRACT

In the North-West Region of the Russian Federation, the major part of harvested grain seeds and fodder grain undergoes the post-harvest treatment at special multipurpose stations to prepare it for storing. Since the characteristics of raw materials supplied from the fields differ significantly, the traditional grain treatment technologies require certain upgrading in terms of both target grain use and its moisture content. Study aim. The presented study focused on the drying process of wheat grain seeds and fodder grain, more specifically, the dynamic pattern of drying time depending on the grain layer thickness. The study object was the drying process of wheat grain in a rotary dryer. Materials and methods. The experiments were performed on a rotary (carousel) drying plant. The study used a stationary "FAUNA-P" in-stream meter with two sensors installed in the carousel dryer and BV-40 silo. It provided the real-time measuring of grain moisture content and temperature and accurate tracking of the dynamic pattern of drying wheat grain seeds and fodder grain in the layer of 0.45 m, which was conveniently divided into three zones of 0.15 m each. Results and conclusions. According to the experiments results, each grain layer dried at a different rate. To reduce the drying time of above 25% moisture grain the drying layer of 0.3 m was found most rational, in contrast to the average initial grain moisture content of 20% and a structurally specified layer height of 0.45 m. The grain layer height in the carousel dryer was considered rational if, having passed it, the heat carrier was completely saturated with moisture. The initial moisture content and the grain drying regime affected not only the drying time, but also, as a consequence, the production capacity and specific energy consumption of the rotary dryer. Thus, with the initial grain moisture content of 21.5%, the production capacity of the dryer in the grain seed drying mode decreased by 1.9 times, and per ton costs increased by 1.45 times as compared to the fodder grain drying mode.

Keywords: grain, seeds, moisture, drying, dryer.

1. INTRODUCTION

Wheat is a worldwide strategic raw material and an important food crop. Global wheat production in 2019 was little less than 740 million tons. In that year, Russia produced about 74.3 million tons with an average yield of 2.74 t/ha accounting for about 10% of the total. At present, Russia ranks third in wheat production and second in terms of the area under the cultivated crop [1,2].

Since the Leningrad Region has favourable natural and climatic conditions, the gross cereal output by the end of 2019 amounted to 146.6 thousand tons or 121.4% to the level of 2018 [2].

In North-West Russia, high-moisture grain seed and fodder grain cannot be preserved without artificial drying. Therefore, it is of particular importance to identify the most suited grain drying modes.

Drying is an essential part of the grain production process in different countries in the world [3, 4, 5, 6]. Due to poor weather conditions, almost all grain crops in Nordic countries have to de dried. Therefore, many research projects of leading scientific centers and manufacturing companies address different drying-related challenges [7, 8, 9].

The presented study focused on the drying process of wheat grain seeds and fodder grain in a thick layer on a rotary dryer.

2. MATERIALS AND METHODS

The study included the experiments with fully ripe wheat grains of Leningradskaya-97 variety following the general and special methods [10, 11] in 2019-2020 on the technological line for post-harvest treatment of cereal crops in ZAO "Aleksino", Volkhovsky District, the Leningrad Region.

The object of research was the wheat drying process in a rotary dryer SKU-6 (Russia) (Figure-1).

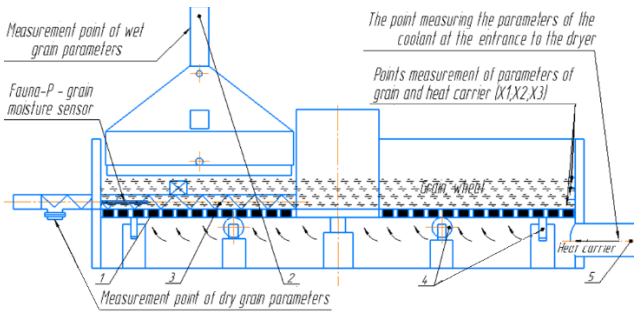

Figure-1. Schematic diagram of the rotary grain dryer under study (side view).

The dryer was a rotating platform (carousel) 1, loaded with wet grain from above-located device 2 with a specified layer height. The lower part of the dried grain layer was unloaded with a screw 3. The carousel's rotation was provided by the drive and the holding rollers 4. The heated air from the heat generator 5 was supplied to the dryer by the fan through the air duct. The air supply was adjusted by an air disk in the duct. The required temperature in the heat generator was maintained by an

©2006-2021 Asian Research Publishing Network (ARPN). All rights reserved.

automatic burner. The drying process was controlled from the operator's workplace.

3. RESEARCH METHODOLOGY

Grain sampling procedure and moisture analysis followed the relevant studies and the State Standard GOST 13586.3-2015 [12,13].

The real-time grain moisture content in the dryer and the ventilated BV-40 silo was measured by FAUNA-P in-steam meter (Russia) based on a capacitive moisture measuring principle. This was a microprocessor displaying the moisture percentage, temperature and the test crop name on a liquid crystal indicator. The device was equipped with two moisture and temperature sensors.

The moisture meter (Figure 2) was a monoblock with the front panel having a liquid crystal display and a command button and the battery compartment in the bottom part of the device.

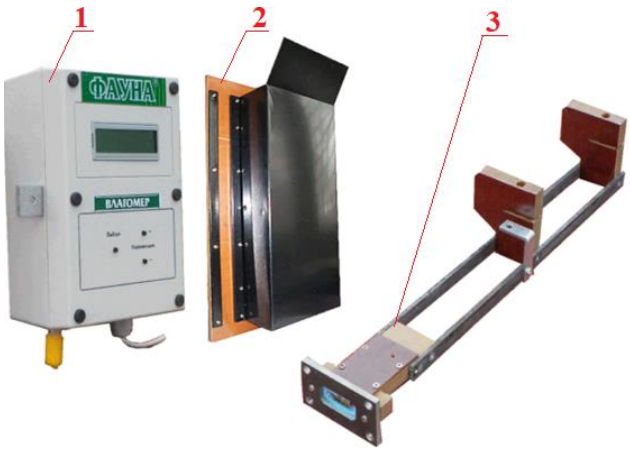

Figure-2. General view of Fauna-P in-stream meter with moisture and temperature sensors. 1 - Display and correction unit for moisture and temperature readings; 2 - Fauna-P grain moisture sensor installed in BV-40 silo; 3 - Fauna-P grain moisture sensor installed in the dryer.

The moisture and temperature sensor readings with a step of two minutes were transmitted via the wire-way to the moisture meter display and the operator's remote control panel. The visual variation of moisture and temperature is shown in Figure-3.

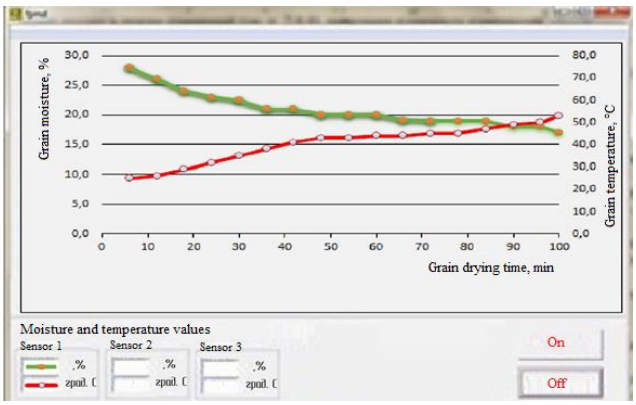

Figure-3. Visualisation of signals from moisture and temperature sensors of Fauna-P in-stream meter.

The control samples for determining the grain temperature and moisture content before and after the dryer's loading were collected from the grain stream falling from the loading device and the unloading screw of the dryer. A 0.5-litre plastic container with a lid was used for this purpose. To measure the grain temperature in the layer, the samples were taken by a sampling probe to a depth of 0.5 m and poured into plastic containers of 0.5 liters minimum. The grain temperature was measured with T7 thermometer (Russia); the moisture content of control grain samples was measured with Wile 65 moisture meter (Finland).

The heat carrier temperature was adjusted by switching over the fuel supply regulator of the heat generator's burner. The inlet heat carrier temperature was measured by a digital thermostatic element installed in the air duct, which automatically regulated the operating temperature and the grain temperature by the automatic shutdown of the burner in case of overheating. The temperature and humidity of the heat carrier at the inlet (in the air duct), in the grain layer and when exiting the grain were measured with a TKA-PKM hot-wire anemometer (model 60) (Russia).

The dryer's performance was determined by the in-flow dry grain sampling by the weight of dry grain samples flowing from the unloading device for a certain period of time. The experiment included five such samplings minimum. The grain was collected into a special container, weighed on an electronic platform weigher with four MAS PM4P-2.0-1212 sensors. The grain flowing time was measured with a SOPpr-2a-3-000 stopwatch.

The dry basis throughput Q_d was calculated in kg h^{-1} by formula (1) [13,14]:

$$Q_C = 60 \frac{\sum_{i=1}^{n} M_i}{\sum_{i=1}^{n} T_i} \quad (1)$$

where M_i – mass of i-th sampling, kg; T_i – flow time of i-th sampling, s;

©2006-2021 Asian Research Publishing Network (ARPN). All rights reserved.

The wet basis throughput Q_w was calculated in kg h^{-1} by formula (2):

$$Q_B = \frac{Q_C(100-\omega_{3C})}{100-\omega_{3B}} \quad (2)$$

where ω_{GD} - grain moisture after drying, %; ω_{GW} - grain moisture before drying, %.

The amount of evaporated moisture W in kg was determined from the difference between the wet and dry basis throughput by formula (3) [14,15]:

$$W = Q_B - Q_C \quad (3)$$

Drying rate U in kg of evaporated moisture h^{-1} was determined by formula (4):

$$U = \frac{W}{T_C} \quad (4)$$

where T_C - evaporation time of the required amount of moisture W, h

To obtain the dependence of drying process on the average heat carrier temperature, the study used the wheat of *Leningradskaya-97* variety in a layer up to 0.45 m thick. The grain mass in the rotary dryer was conveniently divided into three zones, with each zone having an average height of 0.15 m: layer *X1* from 0 to 0.15 m; layer *X2* from 0.15 to 0.3 m; layer *X3* from 0.3 to 0.45 m.

To assess the drying process of wheat grain seeds and fodder grain, experiments on the above dryer aimed to reveal the effect of two main factors: the heat carrier temperature in the air duct t_{air} and the grain layer height H in the rotary dryer. The limiting values of these factors were set as a result of preliminary experiments and analysis of literature sources [16-21].

4. RESULTS AND DISCUSSIONS

The study of the grain layer drying in a rotary dryer demonstrated that the heat carrier temperature decreased as it passed through the grain layer. Consequently, the temperature of grain under drying became lower. In the experiments, thermal sensors installed in each of the three zones monitored the heat carrier temperature variation in the grain layer of a particular zone (Figure-4).

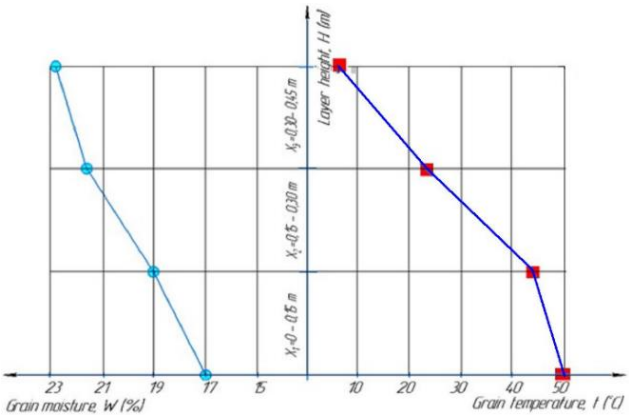

Figure-4. Varation in moisture (W, ●) and temperature (t, ■) of wheat grain seeds across the layer height (drying time T = 110 min) (experiment parameters: initial grain temperature 15.4 °C, initial grain moisture 20.3%, heat carrier temperature 65 °C).

Accordingly, each grain layer dried at a different rate. The grain temperature in the *X1* zone 30 minutes after the drying started was lower by 10-15 °C than the steady-state heat carrier temperature. The average temperature in the *X2* zone was 38 °C. This had a favourable effect on the subsequent drying of this zone when the bottom layer 0.15 m thick was unloaded from the dryer. Wheat grains in this zone were equalized in moisture and were heated, which contributed to a faster removal of moisture from the kernels. The grain temperature in the *X3* zone after 60 minutes of drying was 31 °C, i.e. twice as low as the heat carrier temperature.

The grain moisture evaporation rate in each zone was also different. The higher the zone was located in the direction of heat carrier flow, the slower the grain dried.

The drying process of the upper layers of wheat grain could be divided into two periods. In the first period, the upper grain layers had an excessive moisture; in the second period, the grain moisture content decreased again. When the layer was above optimal, the upper part of this layer did not dry but was moistened. This occurred when the grain temperature was below the adiabatic saturation temperature of the air, which corresponded to the end of the drying process. Figure-5 shows that in the *X2* and *X3* zones, the grain was over-moistened and reached the moisture content higher than the initial one by 2.5 and 4.5%, respectively. The grain layer in the *X2* zone reached its initial moisture content 25 minutes after the start of the experiment, and in the *X3* zone - after 43 minutes.

©2006-2021 Asian Research Publishing Network (ARPN). All rights reserved.

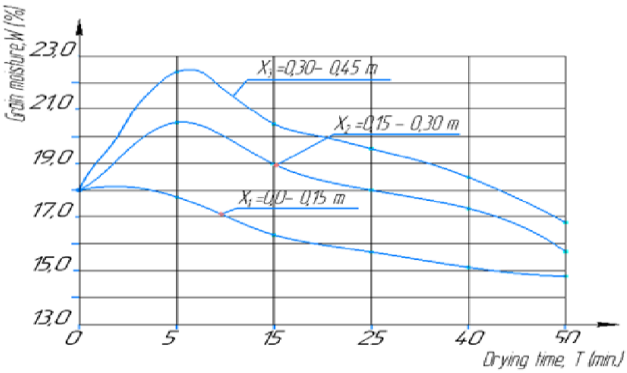

Figure-5. Variation in grain moisture by layers (*X1*, *X2*, *X3*) during the experiment under 18% initial moisture content.

The quantitative relationship between the drying time *T* and moisture *W* at a given time in the *X1*, *X2*, and *X3* zones was approximated by a second-order polynomial:

$$W_{X1} = 20.69 - 0.019 \cdot T - 0.00014 \cdot T^2, \ (R^2=98.2\%) \quad (5)$$

$$W_{X2} = 20.45 + 0.031 \cdot T - 0.00032 \cdot T^2, \ (R^2=97.9\%) \quad (6)$$

$$W_{X3} = 20.44 - 0.04 \cdot T - 0.0003 \cdot T^2, \ (R^2=96.7\%) \quad (7)$$

According to the experiment results, to dry the 0.45 m thick layer (zone *X3*) is inexpedient. Under initial grain moisture content of 28%, after 117 minutes of drying, the moisture content in 0.15 m layer (zone *X1*) became lower by 15%, in 0.3 m layer - by 5%, and the 0.45 m layer - by 4%. Figure 5 shows that when drying the grain with 18% initial moisture content for 50 minutes, the grain moisture content in zone *X3* decreased by 1.2%. The optimal height of the grain seeds layer is close to 0.3 m.

Even if the heat carrier parameters are constant, the optimum thickness of the grain layer under drying changes with varying grain moisture [22]. It should be calculated individually for different grain moisture degree. The optimal layer thickness provides the heat-for-evaporation-saving performance of the dryer. If the grain layer thickness is above the optimal one, then less moisture evaporates from the working surface of the dryer per unit of time and, therefore, the dryer performance decreases. When the layer thickness is below the optimal, the dryer performance improves, but at the same time, much more heat is consumed for moisture evaporation.

Analysis of experiment results showed the significant effect of the grain initial moisture content and drying regime on the dryer production capacity, the cost of consumed energy and specific energy consumption (Figure-6).

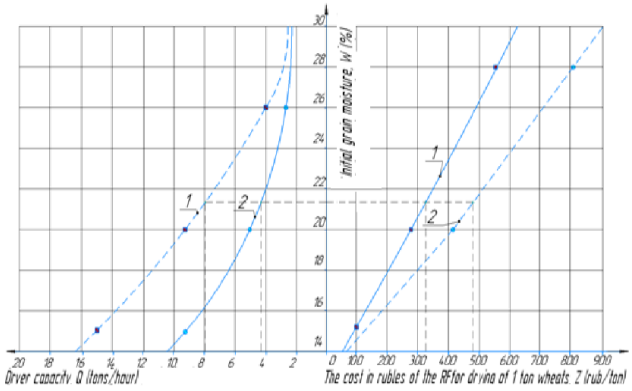

Figure-6. Dependence of the dryer performance, *Q*, t h^{-1}, and the drying costs of 1 ton of grain on the initial moisture content (1- fodder grain drying mode; 2 - grain seeds drying mode).

Thus, with the initial grain moisture content of 21.5%, the production capacity of the dryer in the grain seed drying mode decreases by 1.88 times, and per ton costs increase by 1.45 times as compared to the fodder grain drying mode.

5. CONCLUSIONS

a) Weather conditions during the grain crops harvest in the North-West Region of Russia are characterized by high humidity. The grain must be dried from an initial moisture content of up to 28%. The drying cycle duration for the bottom layer of grain with an initial 28% moisture was 117 minutes. This exceeded the drying time of grain with an initial 20% moisture by 52 minutes. In the upper layers, the grain got over-moistened.

b) To reduce the drying time of high-moisture grain with above 25% moisture content, the drying layer of 0.3 m is suggested, in contrast to the average initial moisture content of 20% and a structurally specified layer height of 0.45 m. The grain layer height in the carousel dryer is considered rational if, having passed it, the heat carrier is completely saturated with moisture.

c) The initial moisture content and the grain drying regime affect not only the drying time, but also, as a consequence, the production capacity and specific energy consumption of the rotary dryer. Thus, with the initial grain moisture content of 21.5%, the production capacity of the dryer in the grain seed drying mode decreases by 1.9 times, and per ton costs increase by 1.45 times as compared to the fodder grain drying mode.

Preliminary data obtained will later form the basis for a full-factor experiment.

©2006-2021 Asian Research Publishing Network (ARPN). All rights reserved.

Conflict of Interest

The author declares no conflict of interests.

ACKNOWLEDGEMENT

The author is immensely grateful to the Editor-in-Chief, the Editorial Board and the reviewers for their roles in the successful publication of this paper

REFERENCES

[1] International Grains Council's grain market review 2020 Bakery products. 7 9-11.

[2] Kuznetsov N. N., Shushkov R. A. and Vershinin V. N. 2019 Simulation modeling of operation of the technological line for grain seeds post-harvest treatment Izvestiya Saint-Petersburg State Agrarian University. 57(4): 235-240.

[3] Rasi J. R., Neto M. and Bernardo R. 2021. Bibliographic prospecting for dryeration process system evaluation in the face of the conventional grain drying. Int. J. Innov. Educ. Res. 9 410-424. 10.31686/ijier.vol9.iss1.2914.

[4] Li C., Li B., Huang J. and Li C. 2020. Developing an online measurement device based on resistance sensor for measurement of single grain moisture content in drying process Sensors 20 4102. 10.3390/s20154102.

[5] Xie Q., Gao M. and Huang X. 2020. Fire risk and behavior of rice during the convective drying process Fire Safety Journal 115 103013. 10.1016/j.firesaf.2020.103013.

[6] Parde S. R., Jayas D. S. and White N. D. G. 2003. Grain drying: A review. Sciences Des Aliments. 23(5): 589-622. DOI: 10.3166/sda.23.589-622.

[7] Development of Moisture Removal Process, Energy Consumption and Control of a Grain Dryer 2016–2019 (EU Project) URL: https://ec.europa.eu/eip/agriculture/en/find-connect/projects/viljankuivaamon-kosteudenpoistoprosessin

[8] Jokiniemi T., Hautala M., Oksanen T. and Ahokas J. 2016 Parallel plate heat exchanger for heat energy recovery in a farm grain dryer Drying Technology. 34(5): 547-556.

[9] Safe and Secure Supply of Grain with Innovative Resource-Efficient Drying, Handling and Storage 2019-2020. (Research project of RISE Research Institutes of Sweden AB - Livsmedelsacceleratorn, Agrifood and Bioscience, Göteborg) URL: https://www.vinnova.se/en/p/safe-and-secure-supply-of-grain-with-innovative-resource-efficient-drying-handling-and-storage/

[10] Strikunov N. I., Cherkashin S. A. 2019. Substantiation of technical and economic performance of seed cleaning and drying plant Bulletin of Altai State Agrarian University. 4(174): 139-142.

[11] Sutyagin S., Pavlushin A. and Ageyev P. 2019 Features of heat treatment of grain in dryers of the contact type E3S Web of Conferences DOI: 126. 00045. 10.1051/e3sconf/201912600045

[12] Leonova T. A. 2016. On the new interstate standard GOST 13586.3-2015 Grain. Acceptance rules and sampling methods Production Quality Control. 1119-21.

[13] Kliuchnikov A. S. 2020. Study of the influence of new drying technology on the quality of grain seeds Izvestiya of Timiryazev Agricultural Academy 1 49-60 DOI: 10.26897/0021-342X-2020-1-49-60

[14] Sorochinsky V. F. 2015. Calculation of the productivity of domestic and foreign grain dryers Bakery products. 2 45-47.

[15] Kuznecov N., Pushkarenko N., Medvedev V., Zaycev P. Vasilev A. and Andreev R. 2018 Model of technological process functioning of post-harvest treatment of grain in the department of supply and preliminary cleaning of grain heaps Vestnik of The Kazan State Agrarian University 13, 4(51): 114-118. DOI: 10.12737/article_5c3de39977c439.48919234

[16] Fedotov V. A., Tsydypova O. N., Ochirov V. D. and Khalymin R. 2015. Influence of parameters of electrothermal radiation on the phytosanitary status of wheat grain seeds Innovations in Agriculture. 2(12): 63-66

[17] Rostovtsev R. A., Puchkov E. M. and Fadeev D. G. 2020. Innovative resource-saving dryer for drying piled flax Machinery and Equipment for Rural Farming. 2(272): 20-25 10.33267/2072-9642-2020-2-20-25

[18] Kuznetsov N. N., Vershinin V. N. 2018. The technological process model of post-harvest grain processing Molochnokhozayistvenny Vestnik. 1(29): 126-133.

©2006-2021 Asian Research Publishing Network (ARPN). All rights reserved.

[19] Puchkov E. M., Medvedev Y. A., Galkin A. V. and Shishin D. A. 2018. Resource-saving technologies and technical means for the processing and drying of flax heap adapted to combine, two-stage and mixed flax harvesting Vestnik of Voronezh State Agrarian University. 1(56): 155-164.

[20] Savinykh P. A., Sychugov Yu V. and Kozakov V. A. 2020. Promising technologies and technical means for grain processing Machinery and Equipment for Rural Farming. 3(273): 22-26.

[21] Savinyh P., Sychugov Y., Kazakov V. and Ivanovs S. 2018. Development and theoretical studies of grain cleaning machine for fractional technology of flattening forage grain Proc 17th Int Sci Conf Engineering for Rural Development May 23–25 Jelgava, 17 124-130.

[22] Perekopskiy A. N. 2015. Rotary high-moisture seeds drier Rural Machine Operator. 5 6-7.