VOL. 16, NO. 23, DECEMBER 2021 ISSN 1819-6608
ARPN Journal of Engineering and Applied Sciences

www.arpnjournals.com

WIND POWER PLANT AUTOMATIC CONTROL SYSTEM WITH AIR SAIL QUALITY

S. A. Orynbayev[1], A. B. Kabanbayev[1], L. N. Esmahanova[1] and G. U. Kuttybayev[2]
[1]Taraz Regional University after M.Kh. Dulaty, Kazakhstan
[2]Kazakh National Agrarian Research University, Kazakhstan
E-Mail: seitzhan_74@mail.ru

ABSTRACT

Renewable energy sources are promising from an environmental point of view energy carriers, which in the future, along with other sources of electric energy, should come to replace traditional sources based on hydrocarbon materials. Turbine wind power stations are most widely used in renewable energy. However, in view of a number of disadvantages inherent in these wind power stations, at present, sailing wind power stations with swinging one or more sails, which do not contain rotary turbines, have been proposed. The article discusses issues aimed at creating an automatic control system for a sailing wind power station, which is designed to increase the productivity, ease of operation and reliability of the wind power station as a whole.

Keywords: wind power station, sail, productivity, control system, algorithm, hardware and software component.

1. INTRODUCTION

Studies of well-known turbine wind power stations are mainly aimed at reducing the cost, increasing the productivity of electric energy due to the unstable nature of the wind flow. To overcome these challenges, researchers have come up with a variety of innovative control methodologies to solve various problems related to power generation, wind turbine speed, and reliability. The control system is used in various parts and subsystems of a wind power system for various purposes [1].The wind power station's control system is mainly divided into three categories:

- Pitch control of the rotor blades [2].
- Control by tracking the maximum feed point [3, 4].
- Generator control from the supply main [5].

A wide arsenal of modern means of microelectronics [6] and apparatus of artificial intelligence [7, 8], robust control [9, 10, 11] is aimed at improving the control systems of turbine wind power stations.

Hardware, software and other controls used in turbine wind power stations can also be used in sailing wind power stations. However, the problems solved by the control system in sailing wind power stations are fundamentally different from the above problems and methods of their solution in relation to turbine wind power stations. This difference is due to the fundamental difference between these wind power stations in the technology of converting wind energy into electric energy and in the technical means used to implement this technology.

Below the goal is to create a system for automatic control of a sailing wind power station described in [12, 13], based on the condition of stable operation with the required performance, regardless of the air mass effect nature. To achieve this goal, the tasks of sailing, damping control, as well as a protection system against emergency situations are solved.

1.1 Technology of Converting Wind Energy in Sailing Wind Power Stations and Used Technical Devices

The technology of converting wind energy in a sailing wind power station [13] consists in the fact that an inflatable toroidal sail with an aerodynamic profile in the cross section captures the kinetic energy of the air mass and transfers forces and movement to the upper platform of a six-movable parallel manipulator. The manipulator converts this energy into mechanical energy of translational movements of the actuators, i.e. six rods relative to the guides. Further, through the power take-off system, the mechanical energy of the actuators is transmitted to the rotor shaft of the electric current generator. The manipulator additionally acts as an active damping device. The system operates as follows: in a gust of wind, the mast with a sail is deflected by a certain angle under the action of the aerodynamic wind forces. At a certain deflection angle (about 10°) of the mast from the vertical position, the air flow breaks off from the toroidal sail. As a result, the air flow effect is reduced and the sail with the mast is returned to its original position under the manipulator's damping forces influence. Then the cycle repeats, i.e. the sail swings in the plane of the resulting wind force. Due to the capabilities of the parallel manipulator, the operation of the sailing wind power station does not depend on the wind direction. However, the decisive factor for the operation of the wind power station is a change in the speed and gusts of wind. The sailing wind power station can operate with a given output power in a wide range of wind speed variations, ranging from 3 m/s to hurricane.

This possibility is provided by the design of the wind power station and the automatic control system. The control system consists of 4 subsystems:

- sailing capacity control;
- damping control;
- control over the generation of electric energy;
- control in emergency situations.

VOL. 16, NO. 23, DECEMBER 2021 ISSN 1819-6608
ARPN Journal of Engineering and Applied Sciences

www.arpnjournals.com

The functional diagram of the sailing wind power station is shown in Figure-1. The diagram includes the functional devices of the wind power station consisting of a sail with a mast, a manipulator converter with damping elements, a power take-off system, a generating system from a generator, a battery and power converters (not shown in Figure). Information and measuring devices include a PLC, speed sensors (anemometer), three accelerometers, a sail pressure sensor, a generator current sensor, and six actuator displacement sensors. The controlled actuators consist of an exhaust electromagnetic valve, a DC motor for a pneumatic pump drive, a pneumatic valve for switching on pumps and valves for individual sails, as well as three motors for preloading the damper springs.

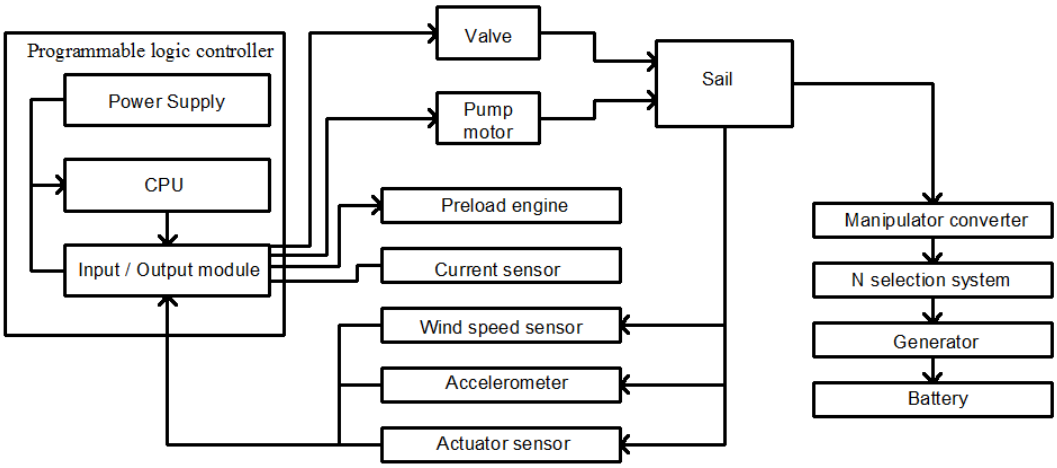

Figure-1. Functional diagram of the automatically controlled sailing wind power station.

2. AUTOMATIC CONTROL SYSTEM OF A SAILING WIND POWER STATION

The automatic control system of the sailing wind power station is controlled by software logic control and via SCAD. The control system (CS) [14] has a variable structure (Figure-2), composed of two configurations - I, II, corresponding to the forward and reverse stroke of the working body (WB), composed of a sail, a mast and a rigidly connected upper platform of the manipulator. The first configuration (forward stroke) is activated by the key element K_1 by connecting contacts 0 and 1. At the same time, other key elements K_2, K_3, K_4 are actuated, closing contacts 3,4 and opening contacts 5,6 and 7,8. In the CS structure according to the configuration I, the disturbing effect is the pulsating wind force F. The pulsating load from the wind action consists of two components: the first is a quasi-static one formed from the low-frequency component of the wind gust; the second represents the resonant frequency. The calculations use the most common low-frequency component. The resonant component is not considered, since the automatic control system will prevent the resonance phenomenon.

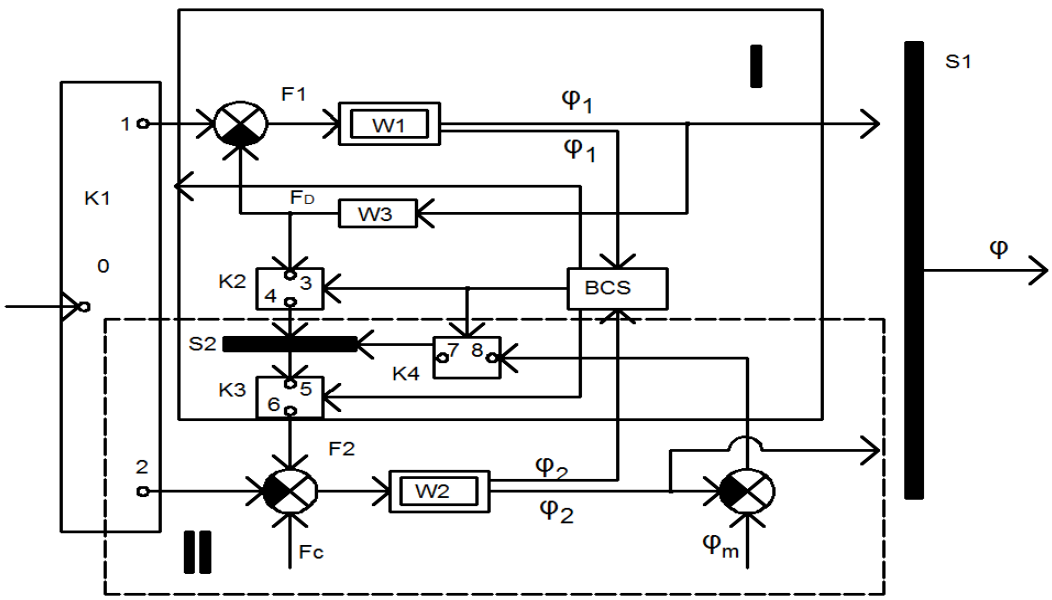

Figure-2. Control system of the WB with a variable structure.

The regularity of wind pulsation is taken according to the results of experiments, which is most typical for a gust of winds [15]. The output quantity for a nonlinear control object with a transfer function (TF) W_1 is the angular displacement $\varphi_1$and the angular velocity $\omega_1$of the WB. The feedback coupling is formed by a damping link with the TF W_3, which forms the elastic force F_D, the energy of which is accumulated in the summer S_2. The second configuration II of the control system is activated by connecting contacts 0 and 2 with the key element K_1, while simultaneously with the key elements K_2,K_3, K_4,contacts 3, 4 open and contacts 5,6 and 7,8 close. In this configuration, a force F_2 acts on the control object with a TF W_2, equal to

$F_2 = F_D + F_C - F$,

here F_D is the elastic force of the compressed spring (elastic element); F_C is the control force resulting from the pre-tensioning of the spring; F is the residual pulsating wind load in the absence of gusts.

The output effect is the parameters of the WB movement. When the speed of the center of the WB mass is equal to zero, the key is actuated and the system returns to the first configuration.

When synthesizing the automatic control system of the sail and wind power station as a whole, the preload change law (during control) is determined, which would provide stable self-oscillation of the WB with different amplitudes, depending on the disturbing effect of the wind and input signals of the control system. It is known that the natural oscillations of the system (self-oscillations) arise in those cases when the conjugate roots of the characteristic equation are imaginary. To achieve that the roots correspond to these conditions, and that these periodic solutions are stable, it is possible by choosing the variable parameters of the system, for example, the surface area of the sail, the shape of the section and dimensions, the elasticity of the damping springs. This confirms the real possibility of creating the controlled wind power station with self-oscillation stable in large processes.

2.1 Control System of the Exhaust Electromagnetic Valve

The exhaust electromagnetic valve is installed in the sail and is designed to release compressed air from the sail to the outside environment. It consists of an electromagnetic and mechanical component. For the electromagnetic component, the following linearized differential equation can be written in operator form

$$RI + LpI = U - k_E px \ , \tag{1}$$

where $R$is the total active resistance of the control winding and control source; U is the input voltage of the valve; L is the inductance of the control winding; k_E is the anti - exhaust electromagnetic valve coefficient; $x$is the electromagnet armature displacement. The tracking force of the electromagnet is determined

$$P_M = k_M I \ , \tag{2}$$

where P_Mi s the tracking force of the electromagnet.

For the mechanical part of the electromagnetic valve, the following second-order differential equation can be written in operator form

$$Mp^2 x + \mu px + cx = P_M + P_R \ , \tag{3}$$

Here M is the sum of the armature mass and the reduced mass of the moving elements of the valve's mechanical part; μ is the air viscosity; $c$is the total stiffness of the mechanical and magnetic springs; P_R is the force reduced to the armature, from the action of the forces applied to the valve's mechanical part. Solving together equations (1-3), the equation of the exhaust electromagnetic valve can be obtained for the dynamic link in the form

$$A(p)x = k_1 U + k_2 B(p) + P \ , \tag{4}$$

where $A(p)$is the proper system operator; k_1, $k_2$are the gear ratios; $B(p)$ is the input system operator. The variables included in the generalized equation of the exhaust electromagnetic valve as a dynamic link are determined by the following dependencies

$$A(p) = \frac{LM}{Rc} p^3 + \frac{\mu L + MR}{Rc} p^2 + \left(\frac{L}{R} + \frac{\mu}{c} + \frac{k_E k_M}{Rc} \right) p + 1;$$

$$B(p) = \frac{L/R \, p + 1}{c}; \quad k_1 = \frac{k_M}{Rc}; \quad k_2 = 1/c;$$

In accordance with the equation (4), a structural diagram of the dynamic link is constructed in the form shown in Figure-3.

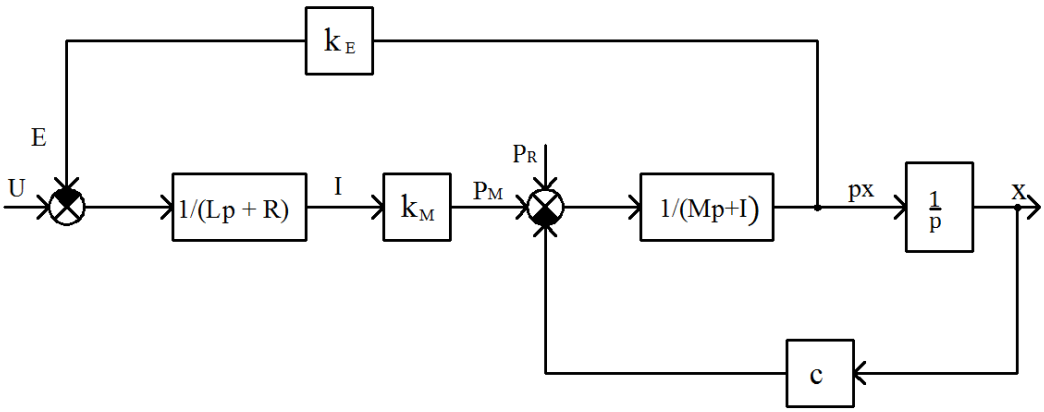

Figure-3. Structural diagram of the exhaust electromagnetic valve.

According to the obtained structural diagram for specific parameters of the exhaust electromagnetic valve, computer simulation was carried out in the MatLab Simulink environment (Figure-4, *a*) and a transfer function was obtained (Figure-4, b), which allowed to evaluate the form of the transfer characteristic and determine the value of the time constant of the system T_1 (indicated by the arrow).

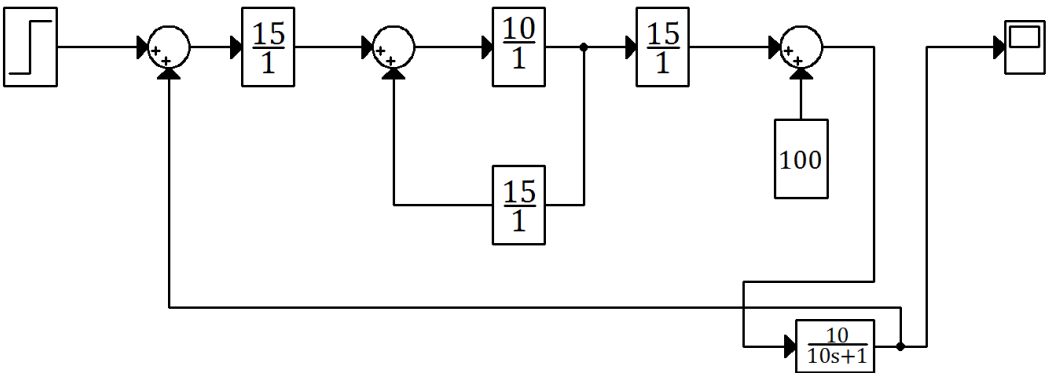

(a)

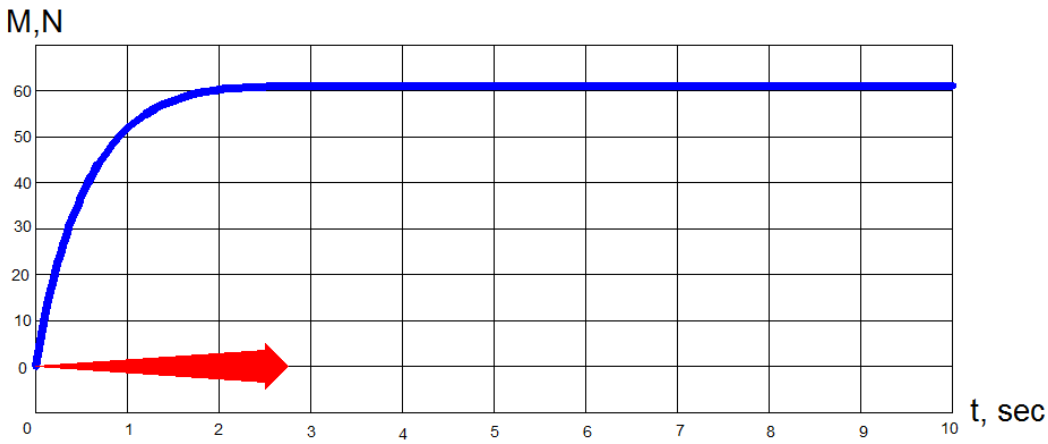

(b)

Figure-4. Study of the electromagnetic valve dynamics.

3. CONTROL ALGORITHM OF A WIND POWER STATION WITH INFLATABLE SWINGING SAILS

The hardware part of the automatic control system is presented above in item 1. The interaction between the subsystems in the ACS of the wind power station is carried out by the PLC (Figure-1). The control algorithm in each of the subsystems and as a whole is shown in Figure-5. The following designations are introduced here: TP1 -turning on the pneumatic pump 1 (the exhaust electromagnetic valve is turned off that that); TV1 - turning on the exhaust electromagnetic valve (when turning on the valve, the pump is automatically turned off); DDP1 - decrease in the damper preload of the actuator 1; IDP1 - increase in the preload; A1 - reading of

the displacement sensor of the actuator 1. Automatic sailing capacity control is designed to change the sail surface area depending on the wind speed. At that, to increase the sensitivity of the sail in a weak wind, it is provided that the wind power station has two sails on one mast. At that, the sail 1 is located above the sail 2 at a distance of 2 meters. For example, at a wind speed of 10 to 15 m/s, the ACS ensures the operation of the sail 2, and air is released from the sail 1, so that it has a minimum area of contact with the air flow. To provide the required sailing capacity depending on the wind speed perceived by the anemometer is the main task of the ACS of the sailing capacity. This system turns on and functions primarily when setting up the ACS of the wind power station. The damping subsystem is designed for the working body to perform cyclic movements. The ACS of the damping is implemented by actuators in the form of controlled mechanisms, which, using rods, change the amount of preliminary compression of the actuator's damper spring depending on the angle β of the mast deflection.

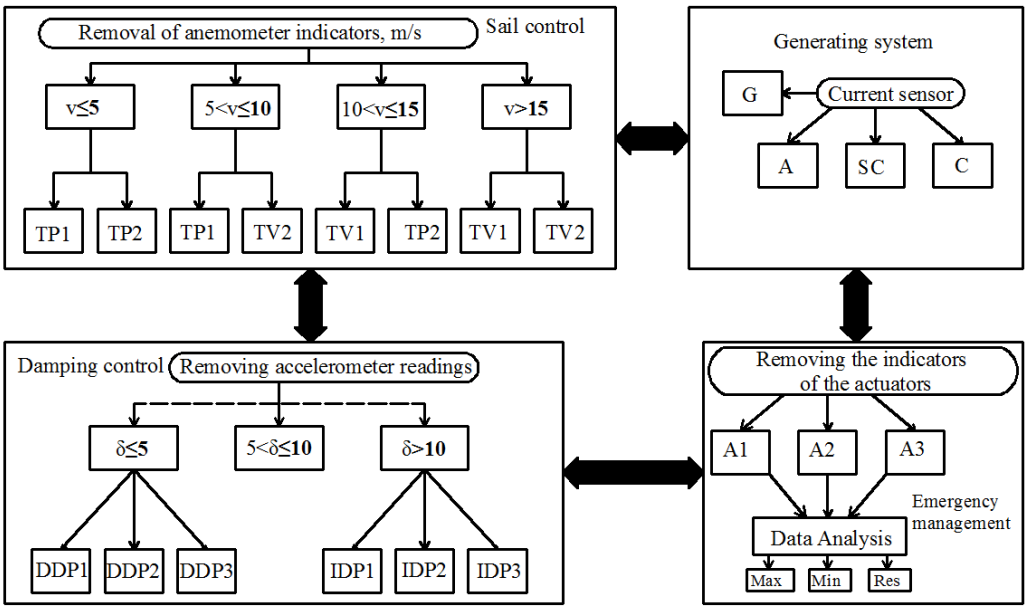

Figure-5. Algorithm of operation of the ACS of the wind power station from the vertical position.

The deflection angles β are calculated in the PLC from the readings of three accelerometers installed at the highest point of the mast.

The electric energy generation control subsystem regulates the work of the wind power station productivity, controls accumulation. The subsystem includes an electric current generator (G), a battery (A), power electronic converters (SK), a controlled filter, and a current sensor. The current sensor is used in the feedback coupling of the sailing capacity and damping change subsystem. In addition, according to the data of the current sensor, the power converters are regulated, the keys for connecting batteries and consumers (C) are turned on [16, 17].

The emergency response subsystem is designed to identify and prevent emergency situations. The emergency situations include excessive external influences - hurricane wind, sudden temperature changes, etc. Resonance phenomena caused by elastic damping forces or other influences, as well as failure of ACS instruments and devices, are also classified as the emergency situations. For the emergency response subsystem, the input quantities are displacements in the actuators, set using displacement sensors. Also, in this subsystem, using the PLC, the number of the actuator is set in real time, in which the minimum and maximum displacement occurs, and the case of resonance is detected by increasing the amplitude of displacements. All subsystems interact with each other, for example, if it is necessary to increase the preload; an actuator is selected, which has the maximum displacement according to the data of the emergency subsystem. If by decreasing the preload in the damping control subsystem it is not possible to increase the angle β, then through the PLC the sailing capacity's control subsystem increases the sailing capacity, etc.

4. CONCLUSIONS

The article describes the structure of the sailing wind power station's control system. The automatic control system of the wind power station consists of 4 subsystems:

- sailing capacity control;
- damping control;
- control over the generation of electric energy;
- control in emergency situations.

The ACS is presented as a nonlinear system with a variable structure. The functional diagram of the ACS, which consists of the information and measuring system, actuators and control PLC, has been considered. The control system of one of the actuators - the exhaust electromagnetic valve used to control the sailing capacity

has been studied. The algorithm for the functioning of all subsystems and the automatic control system of the sailing wind power station as a whole has been developed. The results of the work can be used to create a structure for an automatically controlled wind power station with inflatable swinging sails.

REFERENCES

[1] D. W. Alan, L. J. Fingersh and M. J. Balas. 2006. Testing state space controls for the Control Advanced Research Turbine. 44th Meeting and Exhibit on Aerospace Sciences, Reno, Nevada. pp. 9-12.

[2] M. Bayat and H. Karegar. 2009. Predictive control of wind energy conversion system. 1stInternational Conference on Developments in Renewable Energy Technology (ICDRET). pp. 1-5.

[3] Tsoumas, *et al*. 2003. An optimal control strategy of a variable speed wind energy conversion system. 6th International Conference on Electrical Machines and Systems ICEMS. 1: 274-277.

[4] F. Karim, M. F. Hossain and M. S. Alam. 2011. Modified Hill Climb Searching Method For Tracking Maximum Power Point In Wind Energy Conversion Systems. Proceedings of International Conference on Mechanical Engineering (ICME). pp. 18-20.

[5] M. M. Hussein *et al*. 2012. Simple Sensor less Maximum Power Extraction Control for a Variable Speed Wind Energy Conversion System. Int. Jour. of Sustainability & Green Energy. 1(1): 1-10.

[6] J. W. Perng, G. Y. Chen and S. C. Hsieh. 2014. Optimal PID Controller Design Based on PSO-RBFNN for Wind Turbine Systems. Energies. 7: 191-209.

[7] J. Hostettler, X. Wang. 2015. Sliding mode control of a permanent magnet synchronous generator for variable speed wind energy conversion systems. Jou. of Cont. Sci. and Eng. 3(1): 453-459.

[8] A. Karakaya, E. Karaka. 2014. Implementation of neural network-based maximum power tracking control for wind turbine generators. Turk J Elec Eng & Comp Sci. 22: 1410-1422.

[9] M. Lima, J. Silvino and P. de Resende. 1999. H∞ control for a variable speed adjustable-pitch wind energy conversion system. IEEE Proceedings Ind. Electronics and International Symposium (ISIE). 2: 556-561.

[10] Rocha *et al*. 2001. Control of stall regulated wind turbine through H∞: loop shaping method. IEEE Proceedings International Conference on Control Appl. (CCA). pp. 925-929.

[11] R. Rocha and L. Filho. 2003. A multivariable H∞ controlfor wind energy conversion system. IEEE Proceedings Int. Conference on Control Appl. (CCA). 1: 206-211.

[12] K. S. Sholanov, A. Kabanbayev, K. Abzhaparov. 2020. Study and selection of parameters of automatically controlled wind power station with swaying sails. International Journal of Renewable Energy Research. 10(2): c. 768-779.

[13] Sholanov K. S., Kabanbayev A. B., Abzhaparov K. A. 2018. Selection and calculation of parameters of a wind-driven power plant with an automatically controlled working body. Bulletin of Satbayev University, No. 4.

[14] Dorf R. C., Bishop R. H. 2003. Modern control systems. Prentice Hall. p. 831.

[15] Claudepirre S. G., Elkington S. R., Wiltberger M. 2008. Solar wind driving of magnetosphere ULF waves: Pulsation driven by velocity shear at the magnetopause. J. Geophys Res. Doi: 10.1029/2007JA012890.

[16] Kabanbayev A. B., Orynbayev S. A., Bekmuratov M. 2020. Investigation of aerodynamic characteristics of a wind-driven power plant. ARPN Journal of Engineering and Applied Sciences 15(22): 2728-2735.

[17] A. Nurimbetov, A. Bekbayev, S. Orynbayev, B. Baibutanov, I. Tumanov, M. Keikimanova. 2015. Optimization of windmill's layered composite Blades to reduce Aerodynamic Noise and Use in Construction of Green Cities. Procedia Engineering. 117: 273-287.