VOL. 17, NO. 9, MAY 2022 ISSN 1819-6608
ARPN Journal of Engineering and Applied Sciences

www.arpnjournals.com

THE SOLUTION OF THE INVERSE PROBLEM OF KINEMATICS OF INTELLIGENT ELECTROMECHANICAL SYSTEMS

Kurbanov V. G.[1] and Shishlakov V. F.[2]
[1]Institute of Problems in Mechanical Engineering, Russian Academy of Sciences, Bol'shoi pr., St. Peters, Russia
[2]Saint-Petersburg State University of Aerospace Instrumentation, Bolshaya Morskaya, St. Petersburg, Russia
E-Mail: vugar_borchali@yahoo.com

ABSTRACT

The solution of the problems of the direct and inverse problem of the kinematics of the modules of intelligent electromechanical systems is considered. A description is given of the kinematic model of the system, as well as variants of solving optimization tasks for controlling trajectories of motion.

Keywords: electromechanical system, intelligent control, optimization.

1. INTRODUCTION

To solve the control problem, the solutions of the direct and inverse kinematics problem for various modules of intelligent electromechanical systems (IEMS) are of more interest. Various combinations of structures (sequential, parallel, tree-like, etc.) of IEMS make it easy to design new intelligent robots with wider technological capabilities (simplification of structures, combining transport and technological operations in one mechanism, flexibility of structures, etc.). At the same time, such mechanisms have a more complex kinematic scheme, which requires the use of more advanced control algorithms and the solution of new, complex optimization problems that ensure the implementation of optimal trajectory of movements without jamming.

2. KINEMATIC MODEL OF THE SYSTEM

We consider the IEMS kinematic model (Figure-1).

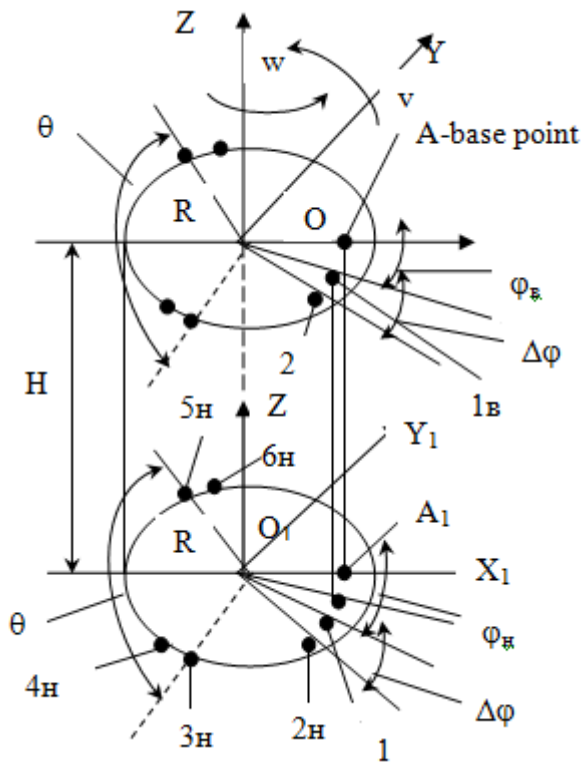

Figure-1. Kinematic model.

In Figure-1 the following designations are accepted:

O - the center of the upper EMS platform in the initial position (after initialization);

O_1 - the center of the lower platform;

OX, OY, OZ - axis of the basic coordinate system with origin at point O;

OX - is directed horizontally and passes through the base point A;

OY - is directed horizontally and is perpendicular to the axis OX;

OZ - is directed vertically up;

1в, 2в, 3в, 4в, 5в and 6в - points of the projection of the centers of the upper hinges 1 - 6 LA (legs of actuators) to the upper platform;

1н, 2н, 3н, 4н, 5н and 6н - points of the projection of the centers of the lower hinges 1 - 6 LA to the lower platform,
$\theta = 120^o$ - corner between pairs of hinges LA on the lower and upper platforms;
H - height of EMS measured as distance between points O and O_1;
$R_в$ - radius of the upper platform;
$R_н$ - radius of lower platform;
$\varphi_в$ - point angle of rotation of 1в in relation to the point A in the *XY* plane in the initial position;
$\Delta\varphi_в$ - a point angle of rotation 2в in relation to the point 1в in the *XY* plane in the initial position;
A_1 - projection of the base point A to the lower platform in the initial position;
$\varphi_н$ - angle of rotation of point 1н in relation to point A_1 in the X_1Y_1plane;
$\Delta\varphi_н$ - angle of rotation of point 2н in relation to point 1н in the X_1Y_1 plane
Ψ - angle of rotation of point 1н in relation to point projection 1в on the lower platform in the X_1Y_1 plane;
$X_1Y_1Z_1$ - the system of coordinates with the beginning in point O_1;
x (t) - movement of the upper platform along the axis OX;
y(t) - movement of the upper platform along the axis OY;
z(t) - movement of the upper platform along the axis OZ;
u(t) - angle of counterclockwise rotation of the upper platform in relation to the axis *X*;
v(t) - angle of counterclockwise rotation of the upper platform in relation to the axis *Y* (PI has this corner directed clockwise);
w(t) - angle of counterclockwise rotation of the upper platform in relation to the axis Z;
ΔRв(t) - compression or stretching of the upper platform;
ΔRн(t) - compression or stretching of the lower platform;
i - the LA number;
в - upper platform;
н - lower platform;
$r_{iв}$ - vector from point O to iвpoint;
$r_{iн}$ - vector from point O1 to iнpoint;
x (0) =0, y(0) =0, z(0) =0, u(0) =0, v(0) = 0, w(0) = 0 - initial position of EMS (after initialization).

3. PROBLEM DEFINITION

It is known [1] that if there is a simultaneous shift (*x (t),y (t)* and *z (t)*) and rotation to the angles (*u (t)*, *v (t)* and *w (t)*) of the upper platform, and also the compression or extension of the upper (ΔRв(t)) and lower (ΔRн(t)) EMS platforms, the radius vectors will vary as follows:

$$\mathbf{r}_{iB}(x,y,z,v,w,\Delta R_в(t)) = \mathbf{C}_u\mathbf{C}_v\mathbf{C}_w(\mathbf{r}_{iB}(0)+\mathbf{A}+\mathbf{B}_{iB}(t)) \quad (1)$$

$$\mathbf{r}_{iн}(\Delta R_в(t)) = (\mathbf{r}_{iн}(0)+\mathbf{B}_{iн}(t)) \quad (2)$$

where,

$$C_u = \begin{vmatrix} 1 & 0 & 0 \\ 0 & 1 & -(u(t)) \\ 0 & u(t) & 1 \end{vmatrix}, C_v = \begin{vmatrix} 1 & 0 & v(t) \\ 0 & 1 & 0 \\ -(v(t)) & 0 & 1 \end{vmatrix}, C_w = \begin{vmatrix} 1 & -(w(t)) & 0 \\ w(t) & 1 & 0 \\ 0 & 0 & 1 \end{vmatrix}.$$

Therefore, the description of the length of the legs of actuators (LA) has the following appearance:

$$\begin{aligned} &L_i(x,y,z,u,v,w,\Delta R_B,\Delta R_H) = \\ &\left(r_{iB}{}^X(x,y,z,u,v,w,\Delta R_B) - r_{iH}{}^X\left(\Delta R_B\right)^2\right) + \\ &+\left(r_{iB}{}^Y(x,y,z,u,v,w,\Delta R_B) - r_{iH}{}^Y\left(\Delta R_B\right)^2\right) + \\ &+\left(r_{iB}{}^Z(x,y,z,u,v,w,\Delta R_B) - r_{iH}{}^Z\left(\Delta R_B\right)^2\right)\Big)^{1/2} \end{aligned} \quad (3)$$

Because

$$C = C_u \cdot C_v \cdot C_w = \begin{vmatrix} 1 & -w & v \\ uv+w & -uvm+1 & -u \\ -v+uw & vw+u & 1 \end{vmatrix} \quad (4)$$

and (2) can be shown as follows:

$$\mathbf{r_{iB}} = \begin{vmatrix} r_{iB}^x + x + B_{iB}^x - w(r_{iB}^y + y + B_{iB}^y) + v(r_{iB}^z + z + B_{iB}^z) \\ (uv+w)(r_{iB}^x + x + B_{iB}^x) + (1-uvw)(r_{iB}^y + y + B_{iB}^y) - u(r_{iB}^z + z + B_{iB}^z) \\ (uw-v)(r_{iB}^x + x + B_{iB}^x) + (vw+u)(r_{iB}^y + y + B_{iB}^y) + r_{iB}^z + z + B_{iB}^z \end{vmatrix} \quad (5)$$

$$\mathbf{r_{iH}} = \begin{vmatrix} r_{iH}^x + B_{iH}^x \\ r_{iH}^y + B_{iH}^y \\ r_{iH}^z + B_{iH}^z \end{vmatrix} \quad (6)$$

Taking into consideration that Li (i = 1, 2,…,6), RB, RH are given, we get the following system of non-linear equations from (3), (5) and (6):

$$\begin{aligned} &\left[\begin{pmatrix} r_{iB}^x + x + B_{iB}^x - w(r_{iB}^y + y + B_{iB}^y) + \\ v(r_{iB}^z + z + B_{iB}^z) - \left(r_{iB}^x + B_{iB}^x\right) \end{pmatrix}\right]^2 + \\ &+\left[\begin{matrix} (uv+w)(r_{iB}^x + x + B_{iB}^x) + (1-uvw)(r_{iB}^y + y + B_{iB}^y) \\ -u(r_{iB}^z + z + B_{iB}^z) - \left(r_{iH}^y + B_{iH}^y\right) \end{matrix}\right]^2 + \\ &+\left[\begin{matrix} (uw-v)(r_{iB}^x + x + B_{iB}^x) + (vw+u)(r_{iB}^y + y + B_{iB}^y) \\ +r_{iB}^z + z + B_{iB}^z - \left(r_{iH}^z + B_{iH}^z\right) \end{matrix}\right]^2 = L_i^2 \end{aligned} \quad (7)$$

where, i = 1, 2,…, 6.
As a result we receive the following:

$$\left\{\begin{matrix} f_1(x,y,z,u,v,w) = 0 \\ . \\ . \\ . \\ f_6(x,y,z,u,v,w) = 0 \end{matrix}\right\} \quad (8)$$

where $f_i(x,y,z,u,v,w), i = 1,\text{K},6$ - non-linear functions that are defined and infinite in the given areas. Or in a vector form:

$$\xi = (x, y, z, u, v, w)^T, F(\xi) = \left[f_1(\xi), \ldots, f_6(\xi)\right]^T,$$
$$0 \le x \le \bar{x}, 0 \le y \le \bar{y}, 0 \le z \le \bar{z},$$
$$0 < u \le \bar{u}, 0 < v \le \bar{v}, 0 < w \le \bar{w} \quad (9)$$
$$F(\xi) = 0$$

4. NEWTON'S METHOD

In [2] an algorithm for solving the problem is proposed using the Newton method. Below is a brief algorithm for solving:

$$\xi^{(k+1)} = \xi^{(k)} - \mathbf{J}^{-1}(\xi^{(k)}) \cdot F(\xi^{(k)}), k = 0,1,2,\ldots. \quad (10)$$

J - Jacobi Matrix

Calculation of the return matrix is labor-consuming; we will transform (10) as follows:

$$J(\xi^{(k)}) \cdot \Delta\xi^{(k)} = -F(\xi^{(k)}), K = 0,1,2,\ldots.$$
$$\Delta\xi^{(k)} = \xi^{(k+1)} - \xi^{(k)}$$

We receive the system of the linear algebraic equations concerning the correction $\Delta\xi^{(k)}$. After its definition, the following approximation is calculated:

$$\xi^{(k+1)} = \xi^{(k)} + \Delta\xi^{(k)}$$

As a result the following algorithm of calculation appears:

a) Initial approximation $\xi^{(0)}$ and a small positive number ε (accuracy) are set. Let k = 0.

b) The matrix of Jacobi is calculated and the system of the linear algebraic equations concerning the correction $\xi^{(k)}$ is solved.

$$J(\xi^{(k)}) \cdot \Delta\xi^{(k)} = -F(\xi^{(k)}), k = 0,1,2,\ldots.$$

c) The following approximation is calculated:

$$\xi^{(k+1)} = \xi^{(k)} + \Delta\xi^{(k)}$$

d) If $\Delta^{(k+1)} = \max_i \left|\xi^{(k+1)} - \xi^{(k)}\right| \le \varepsilon$ the process is finished and $\xi^* \approx \xi^{(k+1)}$ is accepted. If $\Delta^{(k+1)} > \varepsilon, k = k+1$, k=k+1 and go to part 2.

For the convergence of the Newton's method it is sufficient that the function F(ξ) be continuously differentiable, and the Jacobi Matrix is non-degenerate.

In order not to calculate the inverse Jacobi matrix for solving the problem (8), (9) every time, we propose a neural Hopfield network.

5. NEURAL NETWORK OF HOPFIELD

The Neural Networks (NN) of Hopfield [3] is usually applied as models of associative memory. These are single-layer recurrent dynamic networks, but there are networks with one layer of neurons where the exit of one (and each) neuron gets back to the entrance of others.

The dynamics of Hopfield's NN is described as follows:

$$\begin{cases} \dfrac{dx_i}{dt} = \sum_j w_{ij} u_j - I \\ u_j = \varphi(x_j) = \tanh\left(\dfrac{x_j}{\beta}\right) \end{cases} \quad (11)$$

where w_{ii} - the weight of the connection of neurons *i*and *j*, u_j - exit of *j*-neuron, I_i - entrance of *i*-neuron (shift), β regulates the inclination of the activation function.

The abilities of Hopfield's NN to minimize the given energy function allow using them in various optimization problems. For example, in [4], the use of NN of this type for solving systems of nonlinear equations is considered, and in [5] - for solving the problem of identifying a nonlinear dynamic object.

Hopfield's NN can also be used to find a solution to (8).

For a system of nonlinear equations (8), the energy function can be represented in the form:

$$E = \sum_{i=1}^{6} (f_i(x, y, z, u, v, w))^2 \quad (12)$$

The dynamics of the NN should be realized in such a way that the function (12) becomes Lyapunov's function, that is, it has a negative derivative. In this case, the dynamic NN tends to reach a minimum of energy, which corresponds to some constant values of its outputs. It can be shown [3] that the dynamics of a stable NN is determined by the expression:

$$\frac{du_j}{dt} = -\frac{\partial E}{\partial x_j}$$

Then, using (12), we obtain a description of the dynamics of the NN in the form:

$$\begin{cases} \dfrac{du_1}{dt} = -\dfrac{\partial E}{\partial x} = -2\left(\sum_{i=1}^{6} \dfrac{\partial f_i(x,y,z,v,u,w)}{\partial x}\right); \\ \dfrac{du_2}{dt} = -\dfrac{\partial E}{\partial y} = -2\left(\sum_{i=1}^{6} \dfrac{\partial f_i(x,y,z,v,u,w)}{\partial y}\right); \\ \dfrac{du_3}{dt} = -\dfrac{\partial E}{\partial z} = -2\left(\sum_{i=1}^{6} \dfrac{\partial f_i(x,y,z,v,u,w)}{\partial z}\right); \\ \dfrac{du_4}{dt} = -\dfrac{\partial E}{\partial u} = -2\left(\sum_{i=1}^{6} \dfrac{\partial f_i(x,y,z,v,u,w)}{\partial u}\right); \\ \dfrac{du_5}{dt} = -\dfrac{\partial E}{\partial v} = -2\left(\sum_{i=1}^{6} \dfrac{\partial f_i(x,y,z,v,u,w)}{\partial v}\right); \\ \dfrac{du_6}{dt} = -\dfrac{\partial E}{\partial w} = -2\left(\sum_{i=1}^{6} \dfrac{\partial f_i(x,y,z,v,u,w)}{\partial w}\right). \end{cases} \quad (13)$$

Using (13), we can describe the neural network solution of both direct and inverse positional problems. The direct positional problem is formulated as follows: the lengths of the actuators are known; it is required to determine the coordinates of all the nodes. The inverse positional problem is formulated as the problem of finding the lengths of actuators from known positions of nodes.
In Figure-2, the scheme for solving the direct positional problem is shown:

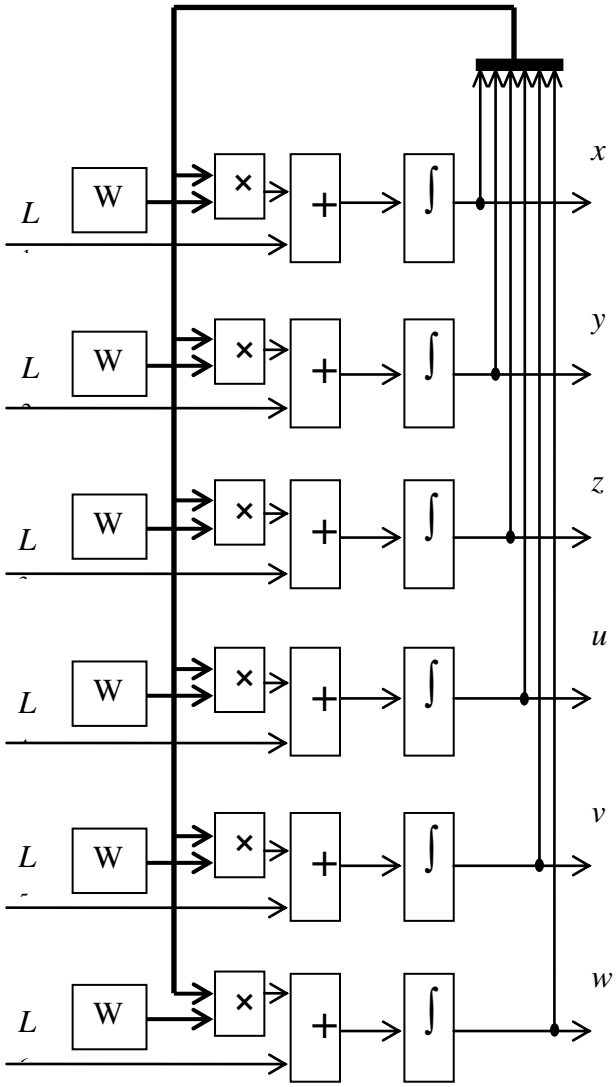

Figure-2. Hopfield's NN structure for solving the direct positional problem.

6. CONCLUSIONS

An algorithmic description of the kinematics problem in the control of the IEMS is obtained. The variants of solving this problem are shown, which can be used in the synthesis of an automatic control system with the required quality of dynamic processes.

ACKNOWLEDGEMENTS

The work was supported by the Ministry of Science and Higher Education of the Russian Federation under the State task under contract No. FFNF-2021-0008121112500304-4. The article is dedicated to the blessed memory of our friend Mikhail Burakov.

REFERENCES

[1] A. E. Gorodetskiy, V. G. Kurbanov, I. L. Tarasova. 2016. The Direct Problem of Kinematics SM8 SEMS. // Smart Electromechanical Systems, pp. 129-143, http://dx.doi/org/ 10.1007/978-3-319-27547-5_12.

[2] V. G. Kurbanov, A. E. Gorodetskiy, I. L. Tarasova. 2016. The Inverse Problem of Kinematics SM8 SEMS. // Smart Electromechanical Systems, pp 143-149, http://dx.doi/org/ 10.1007/978-3-319-27547-5_13.

[3] Hopfield J. J. 1982. Neural networks and phisical systems with emergent collective computational abilities // Proc. Nat. Acad. Sci. U.S.A. 79: 2554-2558.

[4] Burakov M. V. 2017. Solving Algebraic Equations Using the Hopfield Neural Network // Zavalishin Readings'17, GUAP, pp. 14 -18. (In Russian).

[5] Burakov M. V. 2017. Application of the Hopfield neural network for the identification of a dynamic object // XIX All-Russian Scientific and Technical Conference Neurinformatics-2017 Moscow, Collection of proceedings: in 3 parts. (In Russian).