VOL. 17, NO. 11, JUNE 2022 ISSN 1819-6608
ARPN Journal of Engineering and Applied Sciences

www.arpnjournals.com

DESIGN OF VEHICLE FOR PUMPING AND IRRIGATION OF FRUIT CROPS ACTIVATED WITH SOLAR PHOTOVOLTAIC ENERGY

Edwin Rúa R.[1], Saúl Hernández M.[1], Leonardo Cely G.[1], Gonzalo Moreno[2], Ángela González A.[3] and Adriana Granados G.[3]
[1]Engineering Research and Development Group in New Technologies (GIDINT), Faculty of Mechanical Engineering, Santo Tomás University, Colombia
[2]Mechanical Engineering, University of Pamplona, Colombia
[3]Research Group, Systems Engineering GIDESTEC, National Open and Distance University, Colombia
E-Mail: Edwin.rua@usantoto.edu.co

ABSTRACT

This paper presents the design and analysis of efforts of a vehicle without trailer-type engine, to transport a photovoltaic solar pumping system useful for irrigation of fruit tree crops. This vehicle is a solution to the great need that farmers have, especially in the summer months, and is to take water from reservoirs, lakes, deep wells, among others, to crops. Currently, they use ACPM or gasoline pumps, taking risks in transporting the fuel, generating environmental pollution and spending large amounts of money. In this project, a descriptive and applied field methodology was used. For the dimensioning of the photovoltaic solar system, the ampere-hour methodology is applied, based on calculations of overall performance, days of autonomy, annual peak sun hours and losses for each component. With the characterization of the crops. The irrigation system equipment was selected, and were installed in a trailer protected by a metal box. This vehicle can be transported in various ways, by animal traction, by a motorcycle with a hook or shot, or pushed by people since it is light, (300 kg approximately). It is an economic vehicle; the period of recovery of the investment is less than five years, with a useful life of more than twenty years. This system is a practical, economic, innovative solution with great social impact for the agricultural sector, generating savings in personnel, fuel, and electricity, among others.

Keywords: vehicle without motor, solar photovoltaic, analysis of efforts, pumping, irrigation of crops.

1. INTRODUCTION

Boyacá is located in the center of the country, in the Eastern mountain range of the Andes, has a wide climatic and agro ecological diversity, which allows the obtaining of a variety of agricultural products. [1]. Within the municipality's economy, agricultural products stand out, the department is in the first place in terms of national production of deciduous trees, which allows to have a great potential in fruit variety [2].

However, the department faces a great challenge in terms of irrigable areas, since 61.4% of the territory is used for agricultural activities and only 1.8% has works financed with state resources, for the proper use of water (irrigation and drainage) [3]. For this reason, it faces the need to find ways to provide water to crops, since it is the water in the trees that allows the use of nutrients from the soil to obtain better fruit quality and determines the production. The supply of the necessary amount of water, at the appropriate time is indispensable to optimize the growth of the tree and its fruits; risks in abundance or scarcity are harmful to the development of the tree, reducing yields and increasing management costs [4]. The water used for irrigation in Boyacá comes from surface and groundwater. The superficial ones are taken from rivers and streams whose flow decreases in the dry periods, which has led to the need to resort to permanent sources such as groundwater [2], but these sources are subject to external factors that limit the availability and quality of water. For this reason, fruit growing in the department is affected by the variables of production and access costs, climate, technology used and labour.

In this sense, by having to obtain water from deep wells for irrigation, farmers use motor pumps that use as a source of energy coal, fuel or natural gas, i.e., non-renewable energy, usually petroleum products, petrol or diesel, generating environmental pollution, [5] and, consequently, unwanted greenhouse gas emissions, physical risks and economic costs.

In this way, it is evident that there are several simultaneous gaps within them the lack of technological, economic and social strategies and alternatives for the sector, taking into account that production systems are carried out using conventional and unsustainable techniques, which are not sufficient for the needs of the current climate change context and to meet the growing demand for agricultural products in the region and the country [6]. A problem that directly affects fruit farming because of the irrigation systems used without technology and the few that are implemented are not always accompanied by technical support to the farmer. This means that farms with mechanized irrigation are irrigating the fields with a low level of efficiency, often due to the operator's ignorance. In this sense, besides offering innovation tools, it is necessary to contribute with the specialized training, accompaniment and empowerment of the farmer.

In the light of the above, it is necessary to generate innovative strategies to contribute both the adaptation and mitigation of climate change in the agricultural production systems of the department and, in the acquisition and development of equipment and machinery that contribute to the department's fruit production, in order to improve their productivity and

competitiveness vis-à-vis local, national and international markets. A strategy must be sought that contemplates the use of alternative technologies for agriculture, through the use of renewable energies RE (solar, wind, hydroelectric, among others). [7]. Among these technologies, it is the one that uses solar energy as a medium, which is the most important renewable source available on the planet [8], its use is of vital importance for the development of human society and the understanding of its impact and scope has allowed the development of environmentally friendly alternatives.

For this reason, it is necessary to create autonomous and portable systems that allow to create hybrid systems of photovoltaic energy (PV), [9] which grants installing electric pumps and thus to reduce the consumption of fuels, which also brings economic savings. Photovoltaic energy based on the ability of some materials to directly transform solar radiation into electric current through the photovoltaic effect discovered by the French physicist Edmund Becquerel. In 1839, Becquerel discovered that some semiconductor-type materials, when exposed to a light source like the sun, generated an electric current [10]. Since then, several scientists, including Albert Einstein, have studied, explained and perfected the use of this effect for practical purposes.

As a contribution to the difficulty of irrigation, this work proposes the design of a vehicle for a pumping and irrigation system activated with photovoltaic solar energy (SPV) consisting of 3 basic systems: the first one comprises the arrangement of solar panels that capture radiation and transform it into electrical energy, which in turn is transferred to the second system: an engine that drives a pump that converts electrical energy into mechanical energy necessary to move the fluid and third, the liquid's conduction system to its final destination [11]. These three subsystems have their own characteristics and need ancillary systems to perform their work depending on the conditions of the area and the irrigation needs.

2. METHODOLOGY

For the mechanical design of the pumping and irrigation vehicle for fruit crops activated with photovoltaic solar energy, the fruit tree crops of Boyacá were previously visited; the types of terrain, slopes, space between trees were identified, among other relevant variables necessary for the selection of the type of electric pump and the main components of the photovoltaic system (solar panels, controller, batteries and inverter).

There are several methods of dimensioning Solar Isolated Photovoltaic Systems, from formats of calculations to computer software of dimensioning by simulation, among these programs can be mentioned: PVSYST, Hybrid2, PVsol, TRNSYS, HOMER, among others. [12] These programs are widely used by architects and civil engineers.

For this project it was applied a design and dimensioning methodology based on calculations of global performance, Days of autonomy, annual average peak sun hours and losses for each component, for an isolated pumping system. The dimensioning methodology is shown in a diagram below.

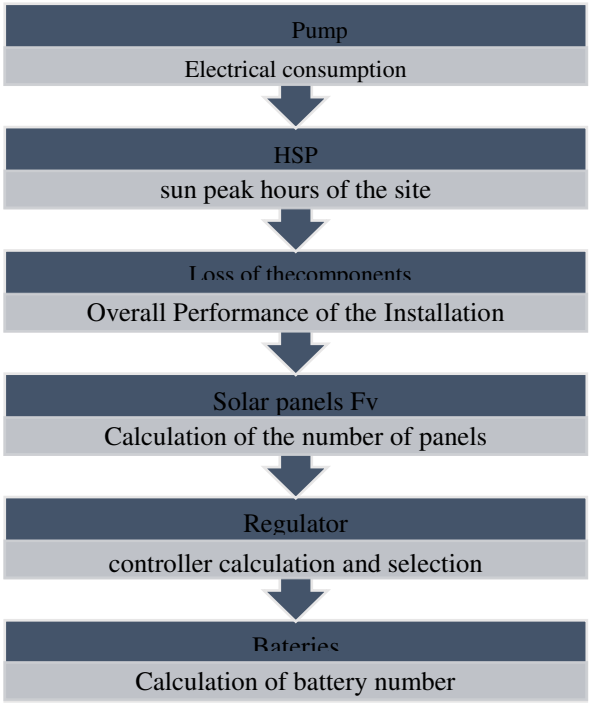

Diagram-1. Methodology.

For the dimensioning of the photovoltaic solar system the methodology was followed by "Amperes-hour" [13].

The methodology is divided into six parts as follows:

a) Calculation of the electrical consumption. [14] For this project would be the power required by the selected electric pump.
b) Determination of the average annual Peak Sun Hours, making use of the information given by NASA through the POWER Data Access Viewer, Prediction of Worldwide Energy Resource. (https://power.larc.nasa.gov/data-access-viewer/), taking as a place of study the city of Tunja, the average is HSP = 5.04 Kw-hr/m 2/day.
c) Determination of the overall performance of the installation using the following equation:

$$R = (1-Kb-Kc-Kr-Kv)\ (1-Ka\ N/Pd) \quad (1)$$

Where: Kb is the coefficient of losses by performance in the accumulator, Ka is the fraction of energy lost by self-discharge, Kc is the loss on investor performance, Kr is the losses in the charge controller, Kv is other losses not previously considered, N is the number of days of autonomy to ensure a load-free service, and Pd is the maximum permissible discharge depth.

d) Calculation of the number of solar panels, considering:

The necessary daily energy that the panels have to supply = Daily consumption / Overall yield
Daily energy produced by the selected panel = Ipm * HSP

e) Calculation of the controller or regulator: The charge regulator must operate at the same voltage as the system and must also be able to operate with a minimum current 10% higher than the maximum intensity of the photovoltaic panels.
f) Calculation of the number and capacity of batteries: Battery capacity = (Consumption * Days of autonomy) / Discharge depth.

For the analysis and selection of the pump, the general energy equation in the required irrigation project is proposed. The two points to consider are: the level of the free surface of the water in the reservoir and the discharge of the irrigation hose in the farthest tree from the crop. In order to determine the pump head, it is considered that in the free surface of the reservoir and in the discharge, the pressure of the fluid is atmospheric and that additionally, the speed of the water in the reservoir is zero. With the above considerations, the pump head (pump h) has to supply the following heights per unit weight of water:

$$\mathrm{h_{pump}} = \mathrm{h_{geodesic}} + \mathrm{h_{dynamic}} + \mathrm{h_{losses}} \quad (2)$$

Where, $h_{geodesic}$ is the change in potential energy, understood as the difference in the elevation of the fluid from the reservoir to the discharge, $h_{dynamic}$ is the change in kinetic energy due to the variation in fluid speed, which is initially at rest and discharged into the hose with a velocity v, and h_{losses} is the total sum of the energy losses (greater by friction and minor by accessories, valves, etc.).
The theoretical power of the pump is determined by:

$$\mathrm{Potencia_{pump}} = (\rho * \mathrm{g} * \mathrm{h_{pump}}) * \mathrm{Q_{pump}} \quad (3)$$

Where, ρ is the density of water, g is the acceleration of gravity and Q is the pumped flow.

Considering that the actuation of the pump is via a portable solar photovoltaic system, the size and power of which are restricted by the size and power of the installed solar panels, the flow rate to be pumped is determined, from the total energy of the pump expressed in water column per unit weight of the fluid.

For the determination of the available NPSH, four requirements are taken:

- The atmospheric pressure of the site, expressed in water column (H_{sp}).
- The vertical distance of the pump from the reservoir (H_s).
- Total energy losses due to friction and accessories such as valves, elbows, etc (H_f).
- The vapor pressure of the water at the average reservoir temperature (H_{vp})

$$NPSH = H_{sp} - H_s - H_f - H_{vp} \quad (4)$$

3. RESULTS

The components needed to irrigate fruit crops through an electric pump and photovoltaic solar components are selected to carry out the design of the vehicle.

A. Selection of Solar Panels FV

Monocrystalline panels are selected because they are more efficient and generate electricity even if there is cloudiness, considering the conditions of cultivation and the limitation of space between branches of trees (1,50m), panels of 280w, because they are commercial, high power, and appropriate dimensions.

Dimensions l x w x h 1650 x 992 x 40 mm.
weight: 19 kg.
Maximum Power: Pmax 280W.
Max point voltage. Power: Vmpp 31.7 V.
Short-circuit intensity: Isc 9.09 A.
Max point intensity Power: Impp 8.52 A

Due to the length of each panel (1650 mm) it is considered appropriate to install three (3) panels lengthwise and thus have a total length of 4950 mm, approximately 5 m. They are installed in parallel to obtain a maximum power of 840 w in the hours of higher solar radiation.

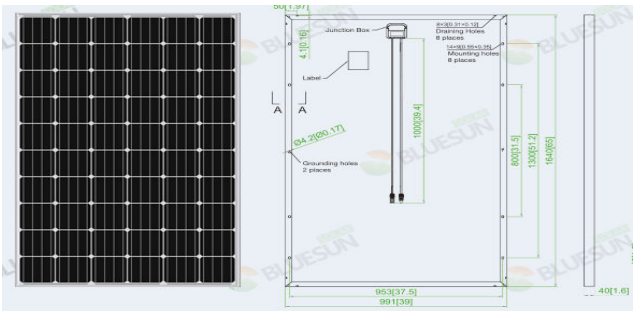

Figure-1. Monocrystalline solar panel 280w.
Source: http://cort.as/-KNRY

B. Selection of the Electric Pump

With a panel drive power of 840 W, the commercial pump that can be operated is 1 Hp (745.7 W). Because the water in the reservoir contains suspended particles of organic origin (algae, leaves, etc.) and mineral origin (clay, sludge, etc.), a centrifugal pump should be selected that is easy to maintain and can pump fluids with sediment. The pump to be selected is therefore 1.1/2A - 1W, reference 63889F00A2, as shown in Figures 2 and 3.

Figure-2. Reference centrifugal pump 63889F00A2.
Source: http://cort.as/-L5ol

Conexión succión	1.1/2" NPT
Conexión descarga	1.1/2" NPT
Altura (ADT) Max	30 m
Caudal Max	52 GPM
Caudal medio	40 GPM
Altura media	20 m
Motor	Monofásico
Potencia	1 HP
Voltaje	110/220 V
Velocidad	3500 RPM
Peso	21.5 Kg
Dimensiones	0.45/0.24/0.27 Mts

Figure-3. Pump technical information
Source: http://cort.as/-L5ol

The curves of the pump family and the required NPSH are shown in Figure-4.

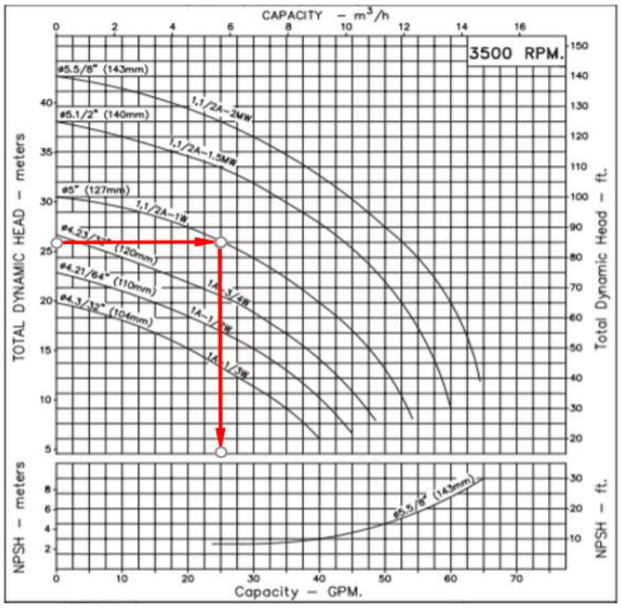

Figure-4. Pump curve and NPSH.
Source: http://cort.as/-L5ol

The atmospheric pressure in Tunja is 73327 Pa, which is equivalent to a column of 7,475 metres of water. The suction line is estimated to be 2 meters below the pump and the water vapour pressure at 15 °C is 1783 Pa which is equivalent to a water column of 0.1821 meters.

The energy losses are determined considering that the suction hose is made of 1.5-inch polyethylene (Dintern = 40 mm), with a roughness of 1.5 X 10-6 m. The maximum length is 2.5 meters and includes a foot valve with filter, to prevent the suction line from becoming unoccupied when the pumping is stopped. Hf = 0.293 meters.

By replacing the above data in the NPSH equation, it is obtained that:

$$NPSH = 7.475m - 2m - 0.293m - 0.1821m = 5m \quad (5)$$

The NPSH required by the manufacturer is approximately 3 meters, which is less than 5 meters from the available NPSH; therefore, it is guaranteed that the phenomenon of cavitation will not occur.

C. Photovoltaic Solar Sizing

To select the components of the solar system Fv [15], [16], local irradiation and peak sun hours must be determined.

Peak sun hours

HSP is determined for the city of Tunja, Boyacá, taking an annual average of solar irradiation on the NASA data page: https://power.larc.nasa.gov/data-access-viewer/

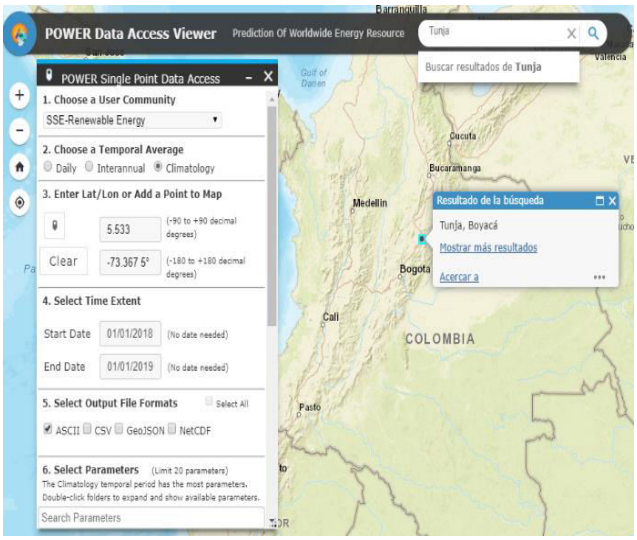

Figure-5. NASA information, annual average irradiation, Tunja Boyacá. Source: POWER Data Access Viewer

Assigning the site location coordinates (Google maps), taking a reference year from January to December 2018, we find the Peak Sun Hours, Annual Average HSP = 5, 04 Kw-hr/m^2/día

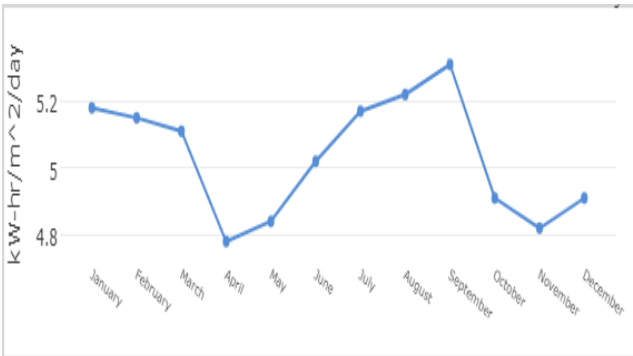

Figure-6. Incident sunlight from the sky on a horizontal surface (January - December 2018). Source: POWER Data Access Viewer

Calculation of the overall performance of the installation

Considering the losses, number of days of autonomy and depth of discharge of the batteries. [17] Considering two days of autonomy in case of rainy or cloudy days and a discharge depth of 60% as recommended by the manufacturers, an overall system performance = 0,745 is obtained

Calculation of the number of solar panels

The number of panels Fv is calculated, considering the daily energy to be produced to supply the power of the pump, the HSP, the overall performance of the system and the operating voltage of the system. We obtain 3 panels of 24v, 280w, installed in parallel.

Calculation of the controller

The selection of the controller requires the system voltage (24v) and the short circuit current for the three panels, with a safety factor of 25%.

I = Isc * 3 panels = 9.09 * 3= 27.27 Amp (6)

With a 25 per cent safety factor= 34.08 Amp
A Smart solar Regulator is selected MPPT 150/35 (12/24V/48V - 35 A)

Figure-7. Controller MPPT 35Amp, 24v
Source: http://cort.as/-LALE

Powerful 35A Victron Smart Solar Charge Regulator, has a MPPT algorithm (Maximum Power Point Tracking) and supports a voltage of up to 150 volts. It is designed for high power photovoltaic installations.

Calculation of batteries

The nominal capacity is determined, with a maximum discharge depth of 60% and two (2) days autonomy N=2. For 8 hours per Day operation

Day energy= 745 w * 5h/day = 3725 w/day
Cu = 3725 w * 2 / 24v = 310, 5 Amp h
Cu = 310, 5 Ah / 0, 6 = 517.22 Ah

Two (2) 12v Power DC deep cycle solar batteries (connected in series) are selected, 510 Ah in C100. Specially designed to operate with discharge depth cycles greater than 50%. See (Figure-10).

Battery Specifications:
Voltage: 12v, Capacity: 510Ah.
Length (mm): 314.
Width (mm): 181.
Height (mm): 416.
Weight (kg): 51.4.

Figure-8. 12v 510Ah DC deep cycle solar battery. Source: http://cort.as/-KNS7

Selection of the investor

To convert the direct current coming from the panels to alternating current, a 24v inverter is used to 110v or 220v.

For the selection of the inverter the voltage of the system Fv (24v) is taken, the power required by the pump (745 w) with a safety factor of 25%. V sist = 24v
Pinv. = 745w * 1.25 = 931, 25 w

Investor selected: Inverter Pure Wave 1000W Peak Power: 2000W Voltage (AC): 100 - 120VAC Dimensions: 29.3*15*9.8 cm Weight: 3.1kg Short circuit protection overloads and discharges.	

Figure-9. Pure wave inverter 1000w, 24v. Source: Mercadolibre http://cort.as/-LA4n

D. Vehicle Design

In the mechanical design process, [18] innovative methodologies such as conceptual design, ideas generation and functional analysis of the transportable irrigation vehicle were considered, together with the support of finite element analysis of the structural part.

Once the need to design the transportable vehicle was identified and analysed, the engineering problem was raised, considering expected results and available resources. Besides, under compliance with the Colombian technical standard NTC 4788, Paragraph 1 specifies the requirements to be met for the operation and transport by road of towed vehicles, with dimensions, maximum gross vehicle weights and maximum axle weights, according to their classification.

Part of the feasibility analysis was the generation of ideas for the vehicle, using the Delphi method, which was based on the gathering of a group of experts, delimiting the context and horizon on the topic, to generate the alternative solution.

Preliminary design of the vehicle

At this stage a preliminary design was developed based on the selected alternative, [19] in which the following analyses were included:

- Functional analysis to ensure that the system under design can perform the required functions properly.
- Safety analysis to avoid damage to its functioning.
- General and detailed drawings
- Selection of the materials
- Cost estimate

For the requirements in the dimensions, the weight of the installation of the pump and components of the photovoltaic solar system was mainly considered.

Table-1. Total weight of the photovoltaic system and electric pump.

Component	Dimensions l x w x h (mm)	weigh t (kg)	Total Weight (Kg)
Electric pump	450x240x270	10	21
Three panels	1650x992x 40	19	57
controller	130 x 186 x 70	1.25	1.25
Batteries	314x181x360	51,4	102,8
Investor	293x150x98	3,1	3,1
Weight of photovoltaic system and pump	185,15		

Source: its own production

The space between stems of the trees, whether in grooves or streets is 4 meters, but between branches is approximately 1.5 meters, this limits us to design a vehicle smaller to this dimension, therefore the panels are joined lengthwise, and thus the width would be 1 m, as can be seen in Figure-10.

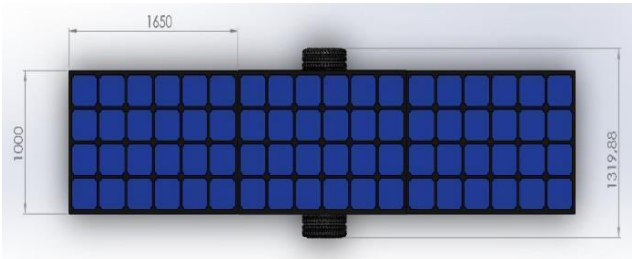

Figure-10. Installation of parallel panels. Source: authors

Knowing the maximum length of the panels in unfolded form that is of 4950 mm, approximately 5 m, a metal structure was designed, that supports the weight of the panels (57 kg) and a metal chassis that supports the weight of the pump and the photovoltaic components (185,15 kg). In addition, 13-inch rims are selected with ploughing suitable for agricultural land.

Theoretical analysis of the spring

In the feasibility analysis it was decided by the design group, that the entire weight of the vehicle must be supported in a system of springs or mechanical springs, generating more safety to the photovoltaic elements, in

particular the solar panels, as this system dampens the weight, reducing vibrations and taking care of the integrity of the elements.

The spring was analyzed as a cantilever beam with maximum load at the end, see Figure-11.

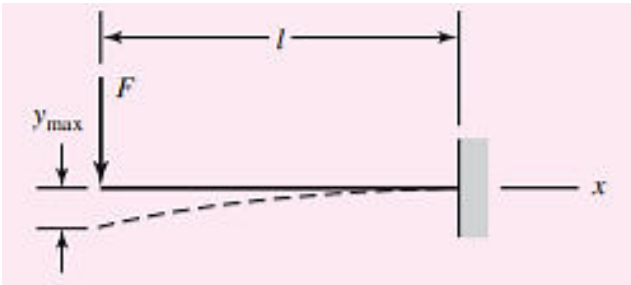

Figure-11. Cantilevered beam.
Source: Shigley book

Using Castigliano's theorem, it is based on estimating potential energy in elastic systems. From this approach, energy was derived in relation to the applied load, thus finding the deflection of the beam or the spring.

$$\delta = \frac{Fl^3}{3EI} \tag{7}$$

The analogy used was to analyse the spring as an element of homogeneous resistance and the effect of its inertia is in the form of a triangle, since the distribution of the leaves has this form, which allowed us to estimate the length of the spring and the width to determine the number of leaves.

$$I = \frac{bh^3}{18} \tag{8}$$

$$\delta = \frac{6Fl^3}{Ebh^3} \tag{9}$$

In this way, the function of deflection for the spring was found, depending on the load applied, the length, the base and the thickness of each sheet.

The analysis of fatigue to infinite life was performed, so the system was expressed in alternating efforts and means, a factor of concentration of Kf efforts of 1.7 was used, supported from the literature as in the book of design of machines of Juvinal.

$$\sigma_a = k_f \frac{M_a c}{I} = k_f \frac{9F_a l}{bh^2} \tag{10}$$

$$\sigma_m = k_f \frac{M_m c}{I} = k_f \frac{9F_m l}{bh^2} \tag{11}$$

The fatigue resistance was estimated as half of the ultimate strength of the material and by adjusting the limit of the fatigue resistance by means of correction factors.

The load correction factor (Shirley) was taken as 1, since the spring is subjected to bending and for the size factor, the spring is not round, so an equivalent diameter should be calculated based on 95% stress area.

In order to obtain a conservative design a reliability factor was used, for the 99.9% desired.

An AISI 1095 steel commonly used on these springs was used, and a fatigue resistance of approximately 550 Mpa was estimated, as a final tensile strength of 1200 Mpa was found in the literature.

From this approach, it was possible to express a function that contains only the length and base.

An analysis was made from the rigidity of the element; another expression was found where the length was left depending on the base, knowing the rigidity of the material as 30 N/mm.

$$P = k\delta \tag{12}$$

$$2F = k\delta \tag{13}$$

$$k = \frac{Ebh^3}{3l^3} \tag{14}$$

It was proposed for the solution to assume a lower alternating effort to the corrected fatigue resistance of the material, with a value of 500 Mpa. In this way, the system of equations was solved, and values of approximately 600 mm for the length and 40 mm for the thickness were found, thus was estimated the number of sheets that were erected 6 according to a commercial thickness of 7 mm.

Simulation of the spring

In order to carry out a theoretical and numerical analysis by finite elements, the simulation of the spring was carried out, with the dimensions estimated in the theoretical analysis, and was subjected to boundary conditions, as will be employed in the towed vehicle.

The numerical simulation software Ansys WorkbenchË 15.0 [20] was used, in order to find the maximum forces and to compare with the theoretical analysis, so that the spring can operate in optimal conditions.

It was exported from Solidworks Software in a format. IGES which reads it seamlessly Ansys. We proceeded to create the model.

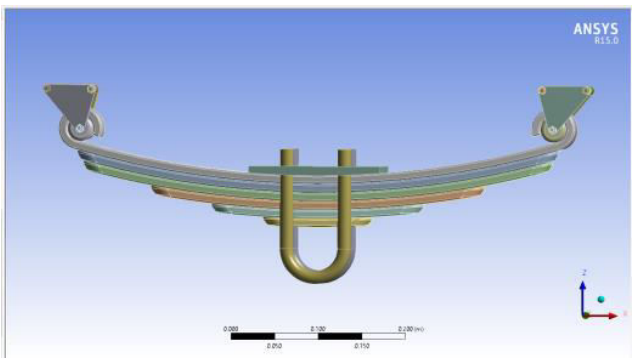

Figure-12. Spring geometry exported to Ansys.
Source: authors

The CAD drawing was carried out in the SOLIDWORKSË, which allowed the geometry of the surface of the drawn test piece to be exported. For a good analysis in ANSYS®, in the mesh used a plane element with constant thickness was used and was malleted with a regular mesh mapped and resolved using different approximation models for the material. [16].

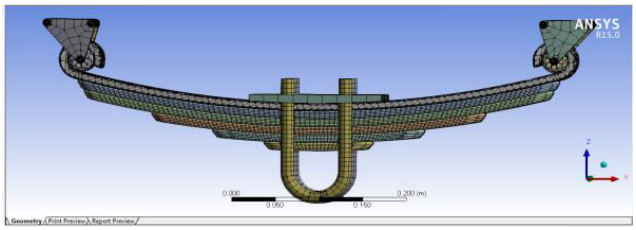

Figure-13. Spring mesh. Source: authors

In the software, the material parameters for an AISI 1095 steel were adjusted in engineering data, [22] once this information was filled the geometry was exported and the spring was meshing in geometry and model, to restrict the simulation with border parameters, applying displacements and forces in setup, and finally solution was given where the results will be analysed.

The boundary conditions were applied by restricting the displacement where the spring is attached to the axle and by applying the load at the ends, as a pressure to make the region of application more homogeneous, see Figuere-14.

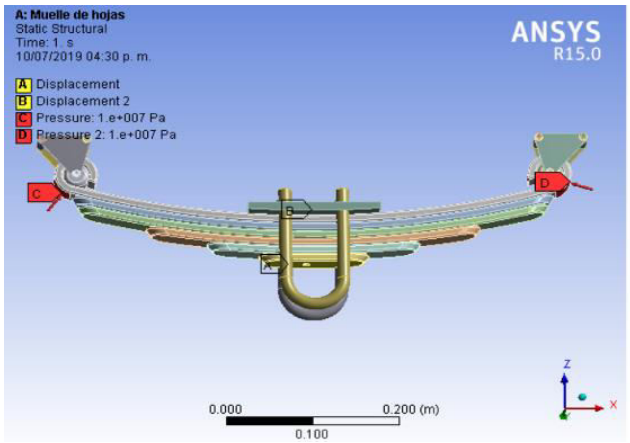

Figure-14. Border conditions. Source: authors

It was decided to apply the load in the form of pressure, at the end, the fasteners are not part of the analysis, as they were left to orient in which position the spring goes.

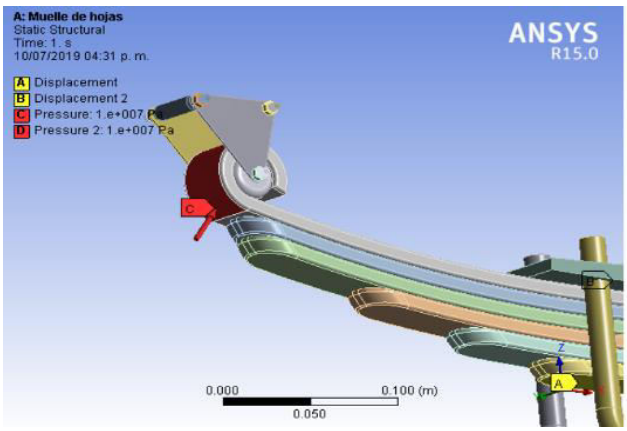

Figure-15. Application of the load on the quay. Source: authors

The Goodman fatigue failure criterion was used, which is one of the most conservative criteria and used in this application of mechanical systems.

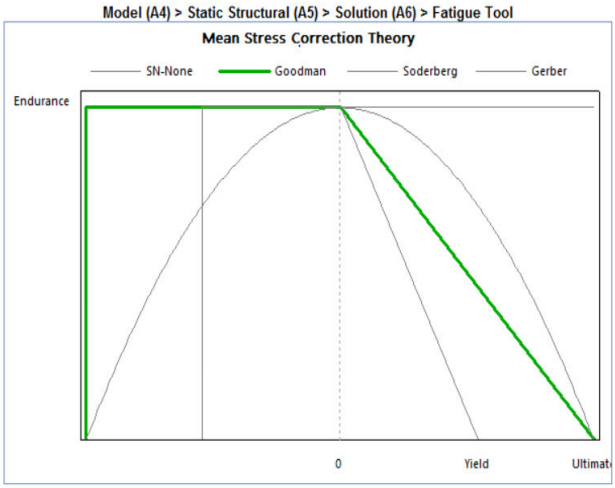

Figure-16. Goodman (Ansys) fatigue failure criterion. Source: Authors

For the analysis of results, the alternating effort of Von Mises and the maximum displacement was chosen, which was compared with the theoretical analysis, see Figure-17.

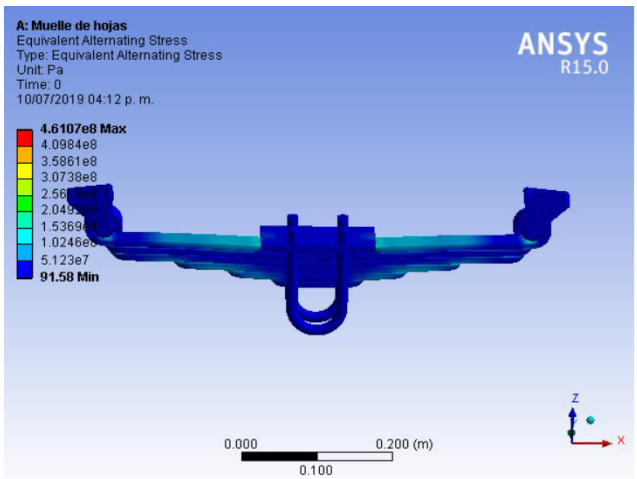

Figure-17. Von Mises' alternating equivalent effort. Source: authors

The result of the maximum effort is 200 Mpa in the body of the leaves, which is good, since it was raised in the theoretical development, the assumption of 500 Mpa, which was expected since it was designed with the dimensions obtained in theoretical analysis. It is also important to emphasize that the maximum effort resulting from cyclic loads must not exceed the fatigue resistance of the material, in order to guarantee its optimal functioning.

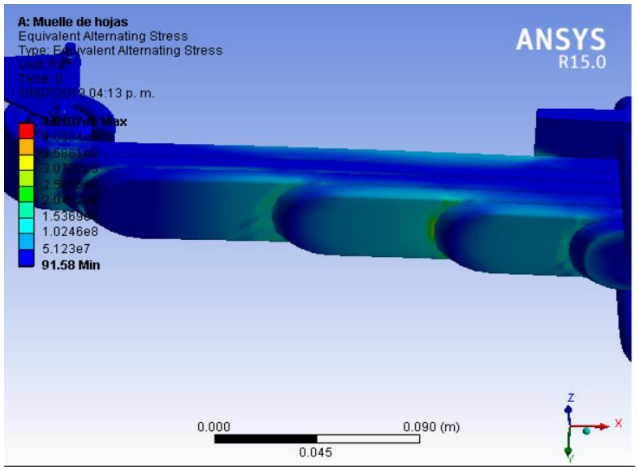

Figure-18. Concentration of spring forces. Source: authors

Stress concentrations were expected at junctions and section changes where the area is very small; however the value is 460 Mpa and does not exceed the fatigue resistance, indicating that the spring will perform a good function in the vehicle.

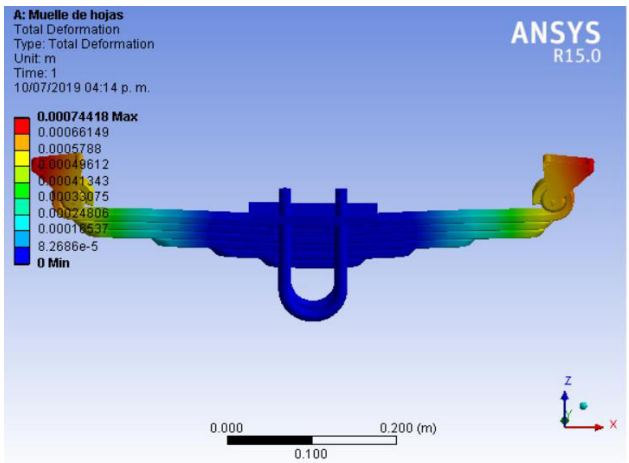

Figure-19. Maximum displacement. Source: authors

It is important to observe the maximum deformations of the mechanical element, so it was analysed in the results, finding a maximum displacement 0.6 mm at the ends, which is permissible and indicates that the total load of the vehicle will be safely cushioned by the spring.

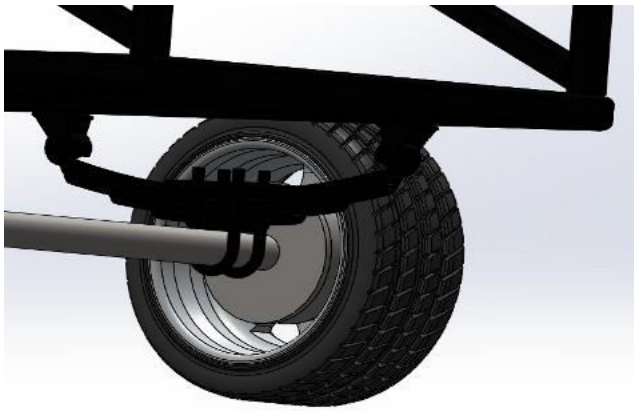

Figure-20. Spring assembly. Source: authors.

Once it was determined that the design of the pier met all the design parameters proposed, the assembly was considered, see Figure-21, and the entire vehicle was designed.

Structural description of the vehicle

Under the restriction parameters of NTC 4788, and the brainstorming of the design committee, a portable watering vehicle was designed for towing.

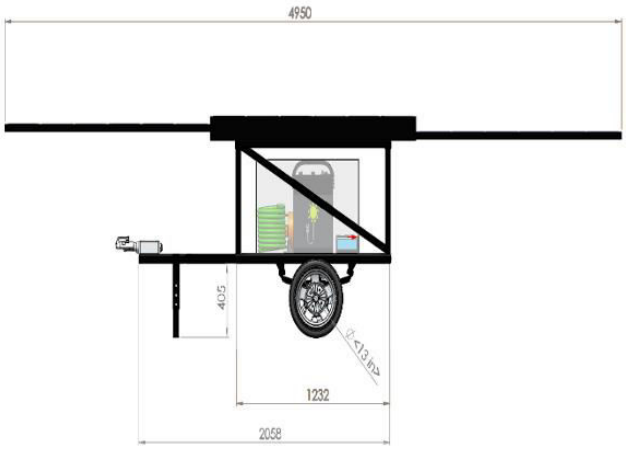

Figure-21. Design of the vehicle structure and its dimensions. Source: authors.

For the transport of the vehicle, a sliding system was designed to collect the panels and make stability and mobility easier. In addition, a coupling or towing system is proposed to be transported with a motorcycle, adapting to the changes in direction of the motorcycle trailer assembly.

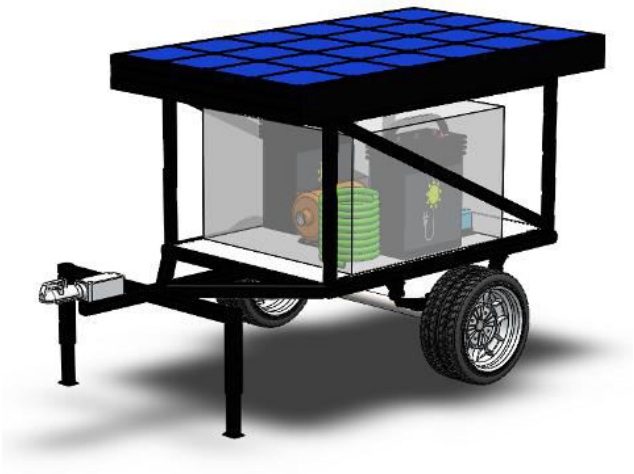

Figure-22. Vehicle design with panels collected front view. Source. Authors

The batteries are installed in the centre of the sheet, leaving a space between them to locate the electric pump. The cabling of the 12v batteries that are installed in series generate 24v are covered with cable protection channels. The cables that go from the panels to the controller are connected in parallel (24V) to increase the amperage and power; they go down the metal structure by a safety channel.

The electric pump is located next to the controller and inverter, being free to release and locate next to the reservoir or source for irrigation and the outlet hose is free for irrigation to the fruit trees.

The controller takes care of receiving the voltage of the panels and adjusting them to 24v, in order to power the batteries that will send a constant charge to the pump.

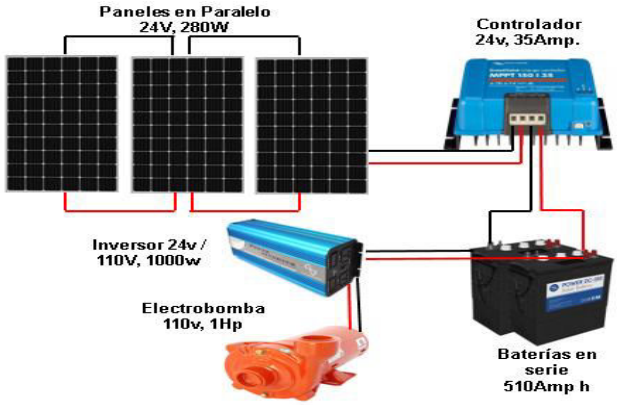

Figure-23. Installation of the solar system fv and pump Source: Authors.

To operate the photovoltaic pumping system, first stabilize the vehicle with the front brackets, then deploy the panels to make the most of the solar radiation, install the pump in the water source (River, lagoon, etc) and discharge to the drip irrigation system.

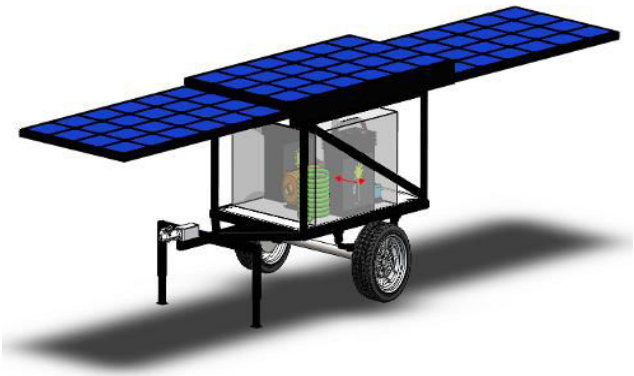

Figure-24. Vehicle design with extended front view panels. Source. Authors

The photovoltaic components and the pump shall be installed and attached to the floor or chassis of the vehicle protected by a metal housing, as can be seen in the design, a box which in turn can be secured with a padlock.

Figure-25. Vehicle design with metal box for component protection. Source. Authors

The location of the heavier components (batteries and electric pump) is on the wheels, placing the regulator and inverter in the rear and the hose in front of the batteries, this distribution allows the centre of gravity of the vehicle to be on the damping and wheels, to give it firmness. In addition, two front supports are designed for when opening

The solar panels counteract the force of the wind that can generate momentum and try to overturn the vehicle.

Figure-26. Vehicle are open panels and front supports supported to the ground. Source: Authors

The final design seen in Fig. 26 is a modular system, where the elements do not depend on each other and can be easily replaced.

The design of the support structure for the solar panels allows the change of the inclination angle with a rotation to different directions to optimize the dimensioning of the generator and to maximize the efficiency of the generator, and it can also be easily operated by end users.

4. CONCLUSIONS

The project seeks to reduce the effects of climate change caused by environmental pollution generated by irrigation systems used in the fruit-growing sector in the department of Boyacá, by creating a portable vehicle for pumping and watering deciduous crops, activated by an autonomous photovoltaic solar energy system, which allows losses to be minimized to the entire production and marketing chain of its products. The above in order to contribute to the social, economic and sustainable development of the department. For this design must be considered:

The frequency and volume of irrigation for fruit trees depends on the crop and species, the climatic conditions and the relative humidity available. The amount of water used by the tree is determined by the species concerned and its age.

The photovoltaic solar dimensioning was carried out from the restriction of the spacing between the branches of the fruit trees, which was determined at approximately 1.5 meters. The overall voltage of the selected system was 24 V.

Monocrystalline panels were selected because they are more efficient and generate electricity despite rain or cloudiness, with a power of 280 wp, maximum voltage of 31.7 V, Max point intensity. Power 8.52 A. They are configured in parallel to add power (840 wp) and current of the three panels 25.56 Amp.

The selected batteries are 12v, therefore they must be installed in series to achieve the 24v required by the pump were selected to operate with two (2) days autonomy, in case of rain or cloudiness.

Centrifugal pump 1.1/2A -1W, reference 63889F00A2, easy to maintain and to pump fluids with sediments was selected.

The selected pump has a height capacity of 30 m and an average flow of 40 GPM (9085 L/h). For Boyacá, the HSP is 5.04. If an irrigation is done in a day, of 5 hours per 9085 L/h, 45425 L/day would be applied. For a hectare of 625 trees up to 72.6 L/ tree could be applied. Well above what is recommended in the agricultural literature.

The use of innovative design methodologies such as conceptual and functional, allows the generation of better proposals to the challenges posed in mechanical engineering, From this the most important element was analyzed and it was determined that the theoretical analysis of the mechanical spring system for the vehicle was good, as it was verified the simulation by finite elements in Ansys, and it is concluded that the dimensions, material and fastenings, are the most appropriate for the good performance of the vehicle, being a system of care and that high vibrations and deformations must be prevented, likewise the spring guarantees these parameters.

REFERENCES

[1] Plan de desarrollo de Boyacá CREEMOS EN BOYACÁ, TIERRA DE PAZ Y LIBERTAD -2016-2019. Recuperado de: https://www.boyaca.gov.co/images/planes/plan-de-desarrollo/pdd-creemos-en-boyaca.pdf

[2] Plan frutícola nacional. 2006. Desarrollo de la fruticultura en Boyacá.

[3] Gobernación de Boyacá. (S.F.). Política Sector Agropecuario. Tunja.

[4] Chambouleyron J. 2005. Riego y Drenaje. Técnicas para el desarrollo de una agricultura regadía sustentable. Tomo 1. Editorial de la Universidad Nacional de Cuyo. Mendoza. 470 p.

[5] Rua, E. *et al*. 2019. «Diseño estructural de transporte para sistema de bombeo portátil activado con energía solar fotovoltaica para el departamento de Boyacá,» REVISTA AMBIENTAL AGUA, AIRE Y SUELO. 9(2).

[6] Observatorio Ambiental de Boyacá. 2014. www.boyaca.gov.co. Recuperado de: http://www.boyaca.gov.co/ambiental/importancia-del-plan-integral-de-cambio-climatico-de-boyaca-piccb/.

[7] Ramírez R. E. *et al*. 2017. «Análisis técnico, socioeconómico y ambiental de la electrificación con energía solar fotovoltaica aislada para vivienda rural en Hato Corozal, Casanare, Colombia» RIAA. 8(1): 239-248.

[8] Castillo T., Macarulla A. M. and Borges C. E. 2018. Design of Sizing Algorithms for a Direct Current Off-Grid Photovoltaic Installation. IEEE LATIN AMERICA TRANSACTIONS, 16(8): 2168-2176., recuperado el 02 de junio de 2019, de http://www.ewh.ieee.org/reg/9/etrans/ieee/issues/vol16/vol16issue08Aug.2018/16TLA8_13Castillo-Calzadilla.pdf

[9] Eraso F. and Erazo O. Potencial Natural para el Desarrollo Fotovoltaico en Colombia. U mariana, pp. 52-59, (s.f).

[10] Ghosh D., Biswas K., Balaji S., Das P., Devi P. and Annapurna K. 2015. A revisit on solar cell: Generation of electricity by harvesting Sunlight. (in English), Science & culture. 81(11/12): 337-347.

[11] Silva M., Calijuri M., Sales F., Souza M. and Lopes L. 2014. Integration of technologies and alternative sources of water and energy to promote the sustainability of urban landscapes. (In English), RESOURCES CONSERVATION AND RECYCLING. 91: 71-81.

[12] Rodríguez-Borges, Ciaddy Gina & Sarmiento-Sera, Antonio. 2011. Sizing through simulation of systems for photovoltaic solar energy applied to rural electrification. Ingeniería Mecánica, 14(1): 13-21. Recuperado en 27 de junio de 2019, de http://scielo.sld.cu/scielo.php?script=sci_arttext&pid=S1815-59442011000100002&lng=es&tlng=en.

[13] Galán C. L. Cálculo del sistema solar fotovoltaico., Recuperado el 28 de junio de 2019 de https://www.youtube.com/playlist?list=PLVVala5ydyfAp_rFznbGkXDTdm0Oh_t9f

[14] Toledo C. A. and Urbina A. 2013. Evaluación de la energía solar fotovoltaica como solución a la dependencia energética de zonas rurales de Colombia. pp. 1-49.

[15] Bhende C. N. and Malla S. G. 2012. Novel Control of Photovoltaic based Water Pumping System without Energy Storage. (In No Linguistic Content). International Journal of Emerging Electric Power Systems. 13(5).

[16] Hernández S. A. & Rivera E. C. 2018. Análisis teórico-práctico de esfuerzos y por elementos finitos de un ensayo de tracción. Ingenio Magno. 9(1): 42-55.

[17] Johnson R.C. mechanical design synthesis with optimization applications.

[18] López L.A. 2016. diseño conceptual y óptimo de sistemas mecánicos, universidad de Guanajuato, México.

[19] Diseño en ingeniería mecánica Shigley novena edición.

[20] ANSYS, Workbench Theory Reference.

[21] Notton G., Muselli M. and Louche A. 1996. Autonomous hybrid photovoltaic power plant using a back-up generator: a case study in a Mediterranean Island, Renew Energy. 7(4): 371-391.

[22] Anglés R. E., González A. A., Moscoso G. A., Vega C. A. and Encinas D. 2008. SER - Energía Renovable en Colombia. eoi - Escuela de Negocios, Plan de Negocios, Madrid, España, junio.